Helios

Helios expertise in aerodynamics. Axial fans without limits.

As one of the leading European fan manufacturers, Helios impresses with extraordinarily large, finely graduated range of high-performance axial, medium-pressure and RADAX® VAR high-pressure fans in all performance ranges.

The next pages present the range for high-performance axial fans with aerodynamic and acoustically optimised impeller and an innovative motor concept (diameter of 250 to 500 mm).

The particularly energy-saving EC models achieve energy savings of over 55% in comparison to conventional AC types thanks to their speed controls.
The AC high-performance axial fans with diameters of 250 to 500 mm and voltage control have an impressive, tried-and-tested and robust design and increase efficiency by 25% while reducing noise by 50%.

The range with diameters of up to 1000 mm is supplemented by solutions for the area of technical building equipment (TGA), see the right hand side.

- Fire gases and smoke extraction types in accordance with DIN 12101-3 in temperature classes F300 (60 minutes), F400 (120 minutes) and F600 (120 minutes). See separate catalogue.
- Specialist solutions for technical building equipment (TGA) and large axial fans with diameters from 1000 to 7100 mm, volumes of up to 2.2 million m³/h can be produced in accordance with customer-specific requirements.
  See www.AxialSoft.de for the design.

HIGH-PERFORMANCE AXIAL FANS
Product-specific information and selection chart

140

Energy-efficient
EC version
Ø 250 – 500 mm
V̇ = 1930 – 8300 m³/h

142on

Standard
AC version
Ø 200 – 1000 mm
V̇ = 520 – 63 420 m³/h

154on

Well-known users from all over the world trust Helios axial fans for ventilation, heating, cooling and drying applications. Large fans have been used successfully for decades e.g. in cooling towers and condensers.

MEDIUM PRESSURE AXIAL FANS
Product-specific information and selection chart

Ø 225 – 630 mm
V̇ = 950 – 26 450 m³/h

180on

RADAX® VAR HIGH-PRESSURE FANS
Product-specific information and selection chart

Ø 225 – 630 mm
V̇ = 900 – 22 310 m³/h

206on

INSTALLATION ACCESSORIES
For axial and RADAX® VAR in-line fans

231on

The following information completes the "General Technical Information" section.

Types
- Helios offer a wide range of products for various applications, i.e. particular help for problem solutions.
- Standard and high-performance fans in industrial design are available as standard in more than 20 standard sizes and more than 1000 types; many of which are shown in this catalogue.
- Closely matched air flow volume and pressure can be achieved on larger fans with a maximum diameter of 7100 mm through adjustable pitch angle. Four standard casing types are available.
- Types HQ, HW and HRF are available up to standard size 500 mm with highly-efficient EC motor technology for particularly energy-saving application and lowest operating costs.

Types in this catalogue
1. **Wall fan HQ**
   Square plate with inlet cone
   Casing made from galvanised sheet steel. Motor with terminal box and motor side guard.
2. **Built-in fans**
   HW, AVD DK
   Circular plate with inlet cone
   Casing made from galvanised sheet steel. Motor with terminal box and motor side guard.
3. **Built-in wall fan HS**
   Cylindrical duct case with spigot ends
   For flush, wall or in-line duct installation. Casing made from galvanised sheet steel with circular stiffening rings.
4. **In-line fans**
   HRF, AVD RK
   Cylindrical duct with flanges on both ends
   For direct in-line installation in ducting. Flanges made to DIN 24155, PT. 3. Casing made from galvanised sheet steel, additional terminal box (IP 55) on outer casing.

Motor
- AC types
  Robust 1 ph. or 3 ph. internal rotor motor with thermal contacts in the windings. Ball bearings lubricated for life.
- EC types
  Highly-efficient, speed controllable external rotor motor protected to IP 44 or 54. Ball bearings lubricated for life.

Impellers
- Depending on the performance requirements the impellers are made from various materials; see product pages. The standard design is made from reinforced polymers. Other materials, aluminium or steel, are available on special order.
- All impellers feature:
  - Low noise characteristics.
  - High efficiency.
  - Vibration free operation due to dynamic balancing to DIN ISO 1940 T.1 – grade 6.3.
- Impellers made from other materials are available upon request.
- The standard models are suitable for air flow temperature from –30° to +60 °C. For higher temperatures metal impellers are available to order. See information on the product pages.

Pitch angle
- The standard products up to 630 mm Ø are equipped with fixed impeller blades.
- Starting from nominal size 710 mm (except type HQW 710/6), the impeller blades are available with order related pitch angles.
- The installation sizes Ø 800/4, 900/4 and ../6 as well as Ø 1000 mm have adjustable blades at standstill.
  This enables the fan to provide the exact duty required. The pitch angle is factory set (must be stated when ordering). The motors are selected using their maximum performance (see table on product page). The maximum pitch angle shown must not be exceeded as the motor will be overloaded.

Air flow direction
All fans (except HRF and AVD RK) come with the air flow direction
A = pulling air over the motor as standard. Air flow direction **B = pushing air over the motor** is available for most models with an additional charge.
HRF and AVD RK come with air flow direction B as standard.
- The air flow direction can be changed after supply, should it be required, for most AC high-performance axial fans. To do so you have to:
  1. Change the direction of rotation of the motor by changing the terminals on the terminal board.
  2. Remove impeller and put it the opposite way round on the shaft (possible up to Ø 500).
  Models HQ and HW allow for a 1/3 drop in performance.
- EC types can only be operated in the set standard direction of rotation.

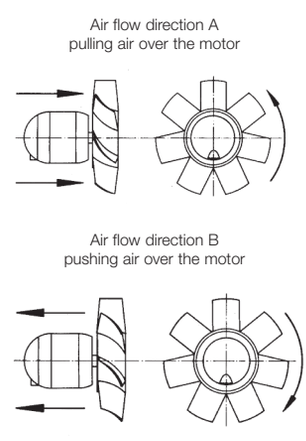

Protection against contact
All relevant safety instructions and regulations must be followed when the fans are installed. A protection against accidental contact to VDE 0700 and/or DIN EN ISO 13857 must be guaranteed. The contact with rotating parts must be avoided. Make sure that there are no items near the inlet which could be pulled into the fan. Fans which are protected when installed (e.g. in ventilation ducting or closed aggregate) do not require a guard if the system provides sufficient safety. We emphasise that the installer is responsible for the safety of the installation by fitting appropriate protection devices. Suitable guards are available as accessories. The responsibility that all relevant regulations have been observed remains with the installer.

Position, installation, drainage holes
- Axial fans are suitable for installation in any position. If condensation is to be expected, (e.g. for intermitting operation, high humidity air flow or rapidly changing temperatures) the fan must be installed with the motor drainage holes facing downward and they must be open.
- If installed outdoors, or in wet conditions or if installed with the motor shaft facing vertically upwards, this must be stated when ordering. Please make sure that the fan is fixed securely and the casing is not squeezed or distorted.

Reverse operation
Most axial fans are reversible (see product page). Using a suitable reversing switch. The fan can be used for intake or extract. In abnormal direction of flow the capacity decreases by approx. 1/3.
- EC types are not reversible as standard.

Air flow temperatures
The standard models are suitable for temperatures from –30 °C to +40 °C or +60 °C (AC or EC types).
Apart from explosion proof fans, higher temperatures are possible for a short time. For permanently higher temperatures special models are available on request.

Motor protection
- For AC types; through thermal contacts in the windings
  - standard for 1 ph. motors,
  - mostly standard for 3 ph. motors (see product page).
- For EC types; integrated electronic temperature monitoring.

Explosion protection
The ex-proof models conform to cluster II, category 2G for operation in zone 1 or 2.
According to directive 2014/34/EU (ATEX), larger air gaps are specified which lead to a capacity reduction of up to 10%.

Extra equipment, additional charge on demand
- **Aluminium cast impeller**
- **Alternative voltage**
- **Alternative frequency**
- **Two pack coating** for protection of external components against diluted acids and lime solutions
- **Alternative air flow direction**
- **Extra equipment for higher air flow temperatures**
- **Pressure-tight encapsulated motors (standard for 1 ph. ex-proof types)**

Anti vibration insulation
To avoid vibration transmission to building and ducting the use of anti vibration mounts (accessory SDD, SDZ) is highly recommended. Larger frame size motors may protrude out of the casing and might move the centre of gravity within the fan.
To avoid an uneven load on the anti vibration mounts, an extension duct is recommended (accessory VR).

By combining the parameters of static pressure increase Δp_{fa}, air flow volume $\dot{V}$, speed min^{-1}, sound pressure level dB(A) and impeller diameter DN mm, the following table facilitates the selection of EC high-performance axial fans Ø 250 to 500 mm and high-performance axial fans Ø 200 to 1000 mm.

Diameter	R.P.M.	Sound press. Intake	Air flow volume $\dot{V}$ m³/h depending on static pressure																
mm	min-1	L_{PA} dB(A)	(ΔP_{fa}) in Pa																
		in 4 m	0	10	20	30	40	50	60	80	100	120	140	160	200	250	300	350	400
EC 250	2300	56	1930	1880	1820	1760	1700	1630	1550	1370	1070								
EC 315	1650	52	3110	3000	2880	2760	2640	2520	2400	2090	1680								
EC 355 A	1200	50	3220	3050	2870	2700	2520	2330	2090										
EC 355 B	1975	59	4200	4150	4090	4020	3960	3890	3820	3690	3540	3360	3100	2790					
EC 400 A	1800	59	4790	4690	4610	4540	4460	4390	4310	4140	3920	3640	3240						
EC 400 B	2150	65	5850	5800	5760	5700	5640	5560	5490	5360	5210	5080	4870	4730	4030				
EC 450 A	1325	55	5460	5350	5250	5140	5030	4910	4790	4520	4200	3730							
EC 450 B	1835	64	7640	7580	7510	7450	7390	7330	7260	7070	6880	6680	6490	6200	5530				
EC 500 A	1025	54	6320	6190	6050	5900	5750	5590	5420	5010	4460								
EC 500 B	1450	62	8300	8230	8150	8070	7970	7880	7790	7490	7300	6910	6530	6140					

Diameter	R.P.M.	Sound press. Intake	Air flow volume $\dot{V}$ m³/h depending on static pressure																
mm	min-1	L_{PA} dB(A)	(ΔP_{fa}) in Pa																
		in 4 m	0	10	20	30	40	50	60	80	100	120	140	160	200	250	300	350	400
200	2300	55	910	860	810	760	710	490	420	330	220								
200	1360	42	520	410	210	170													
250	2800	53	2070	2040	2010	1970	1940	1910	1870	1800	1710	1610	1480						
250	1450	44	930	840	730														
250	950	31	660	570															
315	2800	69	4090	4050	4020	3990	3950	3920	3880	3790	3700	3610	3500	3380	3090				
315	1450	51	2090	2010	1930	1840	1740	1620	1410										
315	950	38	1330	1220	1070														
315	725	30	980	780															
355	2800	71	5710	5670	5620	5580	5530	5480	5430	5330	5220	5110	4990	4860	4550	4020			
355	1450	51	2850	2770	2670	2570	2450	2320	2160										
355	950	42	1940	1830	1690	1500	1060												
355	725	34	1430	1240	880														
400	2800	71	8410	8360	8310	8270	8220	8170	8130	8030	7940	7840	7750	7650	7440	7160	6840	6440	5820
400	1450	56	4010	3920	3810	3700	3580	3440	3300	2970									
400	950	45	2570	2410	2230	2020													
400	725	37	2010	1810	1530														
450	2800	78	11050	10960	10870	10770	10680	10590	10500	10310	10130	9950	9770	9580	9210	8690	8050	6930	4520
450	1450	58	5770	5680	5590	5500	5390	5280	5160	4870	4510	4010							
450	950	47	3890	3720	3550	3360	3150	2890											
450	725	51	2860	2680	2450	2120													
500	2800	81	13150	13040	12930	12820	12720	12610	12500	12290	12070	11860	11660	11440	11010	10380	9600	8620	5390
500	1450	65	8320	8220	8110	8000	7880	7760	7630	7370	7080	6760	6400	5970					
500	950	51	5500	5330	5140	4950	4740	4510	4240	3450									
500	725	44	3890	3690	3440	3150	2750												
560	1450	62	12910	12680	12550	12360	12140	11950	11770	11320	10900	10550	10000	9500	8270				
560	950	52	8100	7680	7370	7080	6680	6280	5830	4570									
560	725	46	6450	6070	5640	5230	4750	4140											
630	1450	65	17870	17650	17420	17200	16970	16750	16520	16010	15500	15000	14500	14000	13000	11300			
630	950	55	10520	10150	9780	9410	9040	8670	8220	7260									
630	725	49	8000	7580	7010	6530	5910	5300											
710	1450	71	23740	23490	23240	22980	22730	22470	22200	21660	21090	20500	19900	19290	18010	16240	14000	11060	
710	935	61	15250	14860	14450	14040	13590	13140	12600	11690	10610	9280	7440						
710	700	54	11350	10810	10250	9630	8990	8300	7500	5340									
800	1435	73	32350	32040	31720	31400	31090	30770	30490	29860	29230	28610	27990	27330	25940	24020	22080		
800	945	62	20720	20280	19830	19350	18850	18290	17710	16530	15330	13840	10740						
800	705	55	15380	14780	14120	13380	12580	11790	10900										
900	1435	76	46060	45700	45390	45030	44670	44310	44000	43280	42600	41880	41170	40800	39060	37110	34940	32800	30340
900	950	66	30500	30100	29500	29100	28500	27900	27400	26300	25100	23910	22710	21310					
900	725	59	21160	20410	19640	18850	18010	17120	16130	15000									
1000	1440	80	63420	63030	62650	62260	61870	61490	61110	60330	59560	58790	58010	57240	55700	53710	51590	49260	46830
1000	950	69	41740	41150	40570	39990	39400	38810	38230	37060	35870	34610	33260	31810	28880				
1000	725	62	31760	30990	30220	29460	28690	27930	27130	25410	23500	21540							

HQ EC

HW EC

HRF EC

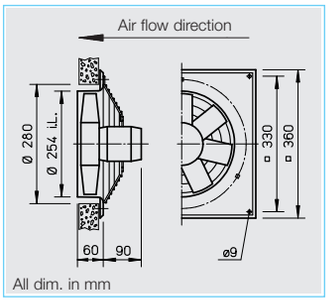

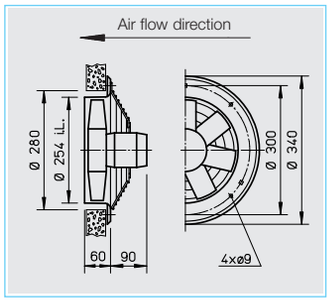

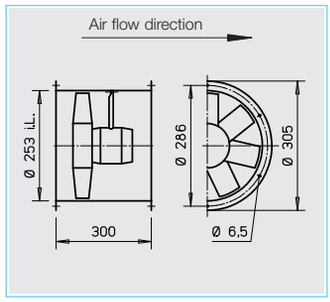

ECgreen Vent 50% Saving * * with speed control

■ **Specification for all types**

□ **Casing**
Manufactured in galvanised sheet steel. Models HQ and HW have the additional protection of two coats of papyrus white.

□ **Impeller**
Highly efficient with profiled polymer blades, aerodynamically optmised for application, dynamically balanced. Operating range from –30 to +60 °C.

□ **Motor**
Energy-saving, speed-controllable EC external rotor motor protected to IP 44 with high level of efficiency. Maintenance-free and interference-free, excellent electromagnetic compatibility (EMC), ball bearing mounted.

□ **Motor protection**
Integrated electronic temperature monitoring for EC motor and electronics.

□ **Electrical connection**
Standard terminal box (protection to IP 54) mounted to running cable and on the outside of the ducting for HRF.

□ **Guard**
Made from powder-coated steel for HQ and HW, in accordance with DIN EN ISO 13857.

□ **Speed control**
All types are steplessly controllable through the speed-potentiometer. Furthermore, control is also possible via three-step switch or steplessly via universal control system or electronic differential pressure/temperature controller. See table below. the example performance stages are shown in the characteristic curves.

□ **Installation**
Installation in any position.

□ **Sound levels**
Sum levels and spectrum figures for sound power and sound pressure levels in 4 m free field conditions are specified above the characteristic curve for a medium intake/exhaust operating point. The sound pressure sum level in 4 m (free field conditions) is also shown in the table below and the table below the characteristic curve for different voltages.
Sound emissions and room acoustics see page 10.

R.P.M.	Air flow volume (FID)	Motor power	Current	Sound pressure	Wiring diagram	max. air flow temperature	Weight net approx.	Type					
								HQ EC incl. guard	Ref. no.	**HW EC** incl. guard	Ref. no.	**HRF EC**	Ref. no.
min^{-1}	V m³/h	kW	A	dB(A) in 4 m	No.	+°C	kg						
1 ph. motor, 1~ 230 Volt, 50/60 Hz, EC motor, protection to IP 44													
2650	1930	0.13	0.97	56	1046	40	6.5	**HQW EC 250 A**	4822	**HWW EC 250 A**	4823	**HRFW EC 250 A**	4824

250 A

Frequency		Hz	Total	125	250	500	1k	2k	4k	8k
L_{WA}	Air noise	dB(A)	76	47	67	70	69	70	67	60
$L_{PA,\ 4\ m}$	Air noise	dB(A)	56	27	46	50	49	50	47	40

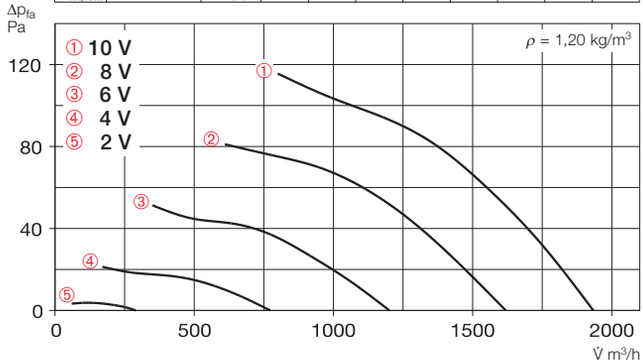

Voltage V	n min⁻¹	Free discharge V̇ m³/h	P_{el} (W)	I_{Motor} (A)	$L_{PA,\ 4\ m}$
10	2650	1930	127	0,97	56
8	2230	1620	77	0,62	52
6	1670	1200	40	0,30	46
4	1090	770	15	0,14	37

Accessories for HRF EC Description see page 231 on

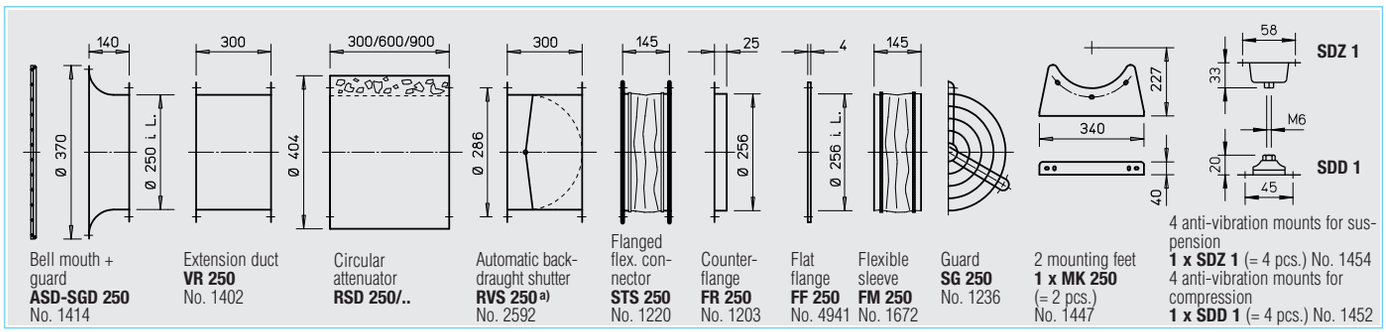

Bell mouth + guard **ASD-SGD 250** No. 1414

Extension duct **VR 250** No. 1402

Circular attenuator **RSD 250/..**

Automatic back-draught shutter **RVS 250** a) No. 2592

Flanged flex. connector **STS 250** No. 1220

Counter-flange **FR 250** No. 1203

Flat flange **FF 250** No. 4941

Flexible sleeve **FM 250** No. 1672

Guard **SG 250** No. 1236

2 mounting feet **1 x MK 250** (= 2 pcs.) No. 1447

4 anti-vibration mounts for suspension **1 x SDZ 1** (= 4 pcs.) No. 1454
4 anti-vibration mounts for compression **1 x SDD 1** (= 4 pcs.) No. 1452

a) Motorised backdraught shutter see Accessories product pages

Information	Page
Techn. description	140
Selection chart	141
Information for planning	10 on

Made to order designs
Alternative voltages, protection classes, air flow direction, air flow temperature, acid protection and cast aluminium impellers are available on request.

Note the technical information on page 15 on.

Other accessories	Page
Filters and attenuators	421 on
Backdraught shutters and grilles	487 on
Universal control system, electronic controller, speed-potentiometer	539 on

Universal control system		Speed-potentiometer flush		Speed-potentiometer surface		Three-step speed switch flush		Three-step speed switch surface		Electronic diff. pressure controller/switch		Electronic temperature controller/switch	
Type	Ref. no.	**Type**	Ref. no.	**Type**	Ref. no.	**Type**	Ref. no.	**Type**	Ref. no.	**Type**	Ref. no.	**Type**	Ref. no.
EUR EC 1)	1347	**PU 10** 1)	1734	**PA 10** 1)	1735	**SU-3 10** 1)	4266	**SA-3 10** 1)	4267	**EDR** 1)	1437	**ETR** 1)	1438

1) Several EC fans can normally be connected, see Accessories

HQ EC

HW EC

HRF EC

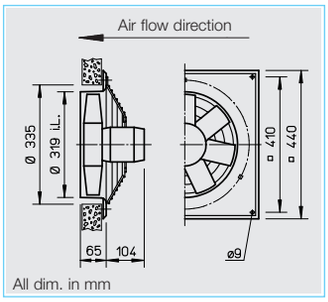

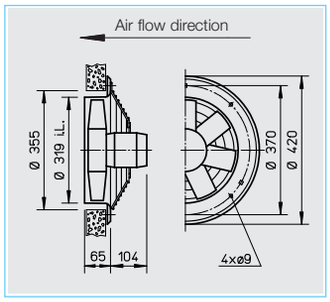

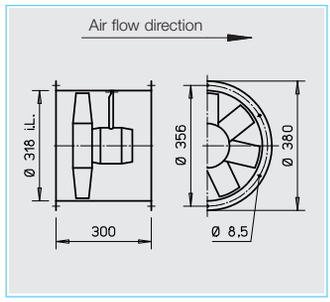

ECgreen Vent 50% Saving *

* with speed control

■ **Specification for all types**

□ **Casing**
Manufactured in galvanised sheet steel. Models HQ and HW have the additional protection of two coats of papyrus white.

□ **Impeller**
Highly efficient with profiled polymer blades, aerodynamically optmised for application, dynamically balanced. Operating range from –30 to +60 °C.

□ **Motor**
Energy-saving, speed-controllable EC external rotor motor protected to IP 44 with high level of efficiency. Maintenance-free and interference-free, excellent electromagnetic compatibility (EMC), ball bearing mounted.

□ **Motor protection**
Integrated electronic temperature monitoring for EC motor and electronics.

□ **Electrical connection**
Standard terminal box (protection to IP 54) mounted to running cable and on the outside of the ducting for HRF.

□ **Guard**
Made from powder-coated steel for HQ and HW, in accordance with DIN EN ISO 13857.

□ **Speed control**
All types are steplessly controllable through the speed-potentiometer. Furthermore, control is also possible via three-step switch or steplessly via universal control system or electronic differential pressure/temperature controller. See table below. the example performance stages are shown in the characteristic curves.

□ **Installation**
Installation in any position.

□ **Sound levels**
Sum levels and spectrum figures for sound power and sound pressure levels in 4 m free field conditions are specified above the characteristic curve for a medium intake/exhaust operating point. The sound pressure sum level in 4 m (free field conditions) is also shown in the table below and the table below the characteristic curve for different voltages.
Sound emissions and room acoustics see page 10.

R.P.M.	Air flow volume (FID)	Motor power	Current	Sound pressure	Wiring diagram	max. air flow temperature	Weight net approx.	Type					
								HQ EC incl. guard	Ref. no.	**HW EC** incl. guard	Ref. no.	**HRF EC**	Ref. no.
min^{-1}	V m³/h	kW	A	dB(A) in 4 m	No.	+°C	kg						
1 ph. motor, 1~ 230 Volt, 50/60 Hz, EC motor, protection to IP 44													
2040	3110	0.19	1.50	52	1046	40	8.0	**HQW EC 315 A**	4880	**HWW EC 315 A**	4881	**HRFW EC 315 A**	4882

315 A

Frequency		Hz	Total	125	250	500	1k	2k	4k	8k
L_{WA}	Air noise	dB(A)	72	44	65	66	67	65	60	51
$L_{PA,\ 4\ m}$	Air noise	dB(A)	52	24	45	46	47	45	40	31

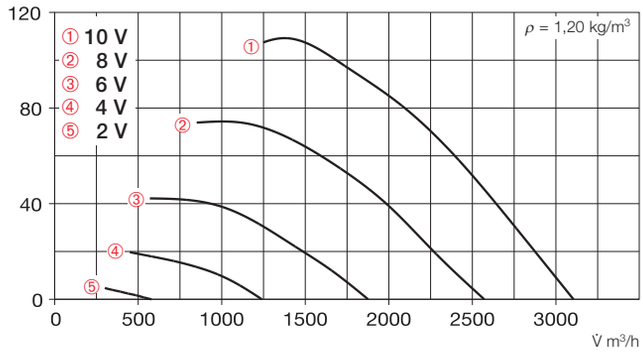

Voltage V	n min⁻¹	Free discharge V̇ m³/h	P_{el} (W)	I_{Motor} (A)	$L_{PA,\ 4\ m}$
10	2040	3110	190	1,5	52
8	1670	2570	110	0,9	48
6	1240	1880	50	0,4	42
4	845	1240	20	0,2	34

Accessories for HRF EC Description see page 231 on

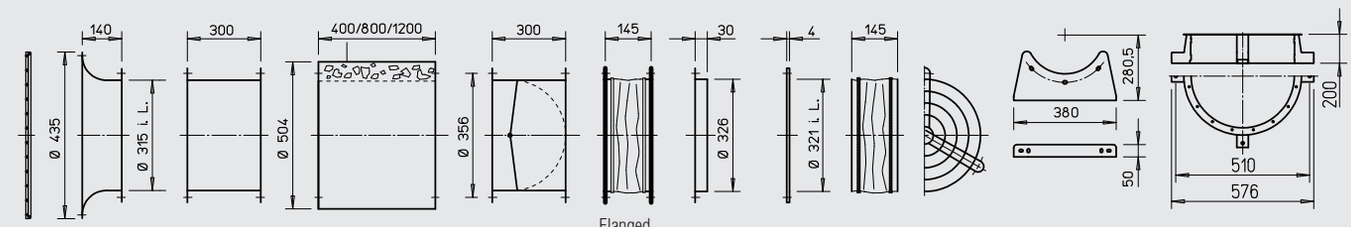

Bell mouth + guard **ASD-SGD 315** No. 1416

Extension duct **VR 315** No. 1404

Circular attenuator **RSD 315/..**

Automatic back-draught shutter **RVS 315** a) No. 2594

Flanged flex. con-nector **STS 315** b) No. 1221

Counter-flange **FR 315** No. 1204

Flat flange **FF 315** No. 4943

Flexible sleeve **FM 315** b) No. 1674

Guard **SG 315** No. 1237

Mounting feet **MK 315** (1 set = 2 pcs.) No. 1448

Mounting ring for vertical installation **MRV 315** No. 1755

a) Motorised backdraught shutter see Accessories product pages

Information	Page
Techn. description	140
Selection chart	141
Information for planning	10 on

Made to order designs
Alternative voltages, protection classes, air flow direction, air flow temperature, acid protection and cast aluminium impellers are available on request.

Note the technical information on page 15 on.

Other accessories	Page
Filters and attenuators	421 on
Backdraught shutters and grilles	487 on
Universal control system, electronic controller, speed-potentiometer	539 on

Universal control system		Speed-potentiometer flush		Speed-potentiometer surface		Three-step speed switch flush		Three-step speed switch surface		Electronic diff. pressure controller/switch		Electronic temperature controller/switch	
Type	Ref. no.	**Type**	Ref. no.	**Type**	Ref. no.	**Type**	Ref. no.	**Type**	Ref. no.	**Type**	Ref. no.	**Type**	Ref. no.
EUR EC 1)	1347	**PU 10** 1)	1734	**PA 10** 1)	1735	**SU-3 10** 1)	4266	**SA-3 10** 1)	4267	**EDR** 1)	1437	**ETR** 1)	1438

1) Several EC fans can normally be connected, see Accessories

HQ EC

HW EC

HRF EC

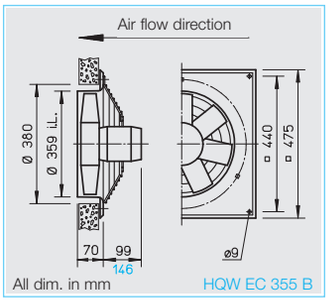

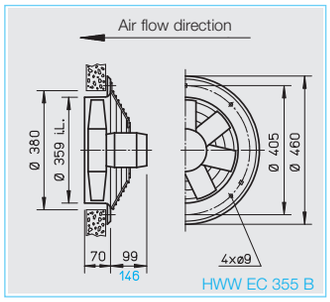

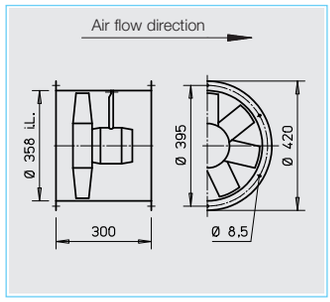

ECgreen Vent 50% Saving * * with speed control

■ **Specification for all types**

□ **Casing**
Manufactured in galvanised sheet steel. Models HQ and HW have the additional protection of two coats of papyrus white.

□ **Impeller**
Highly efficient with profiled polymer blades, aerodynamically optmised for application, dynamically balanced. Operating range from –30 to +60 °C.

□ **Motor**
Energy-saving, speed-controllable EC external rotor motor protected to IP 44 (type A), IP 54 (Type B) with high level of efficiency. Maintenance-free and interference-free, excellent electromagnetic compatibility (EMC), ball bearing mounted.

□ **Motor protection**
Integrated electronic temperature monitoring for EC motor and electronics.

□ **Electrical connection**
Standard terminal box (protection to IP 54) For HQ and HW types mounted to running cable ("A") or on the back of the motor ("B"). For HRF types on the outside of the ducting.

□ **Guard**
Made from powder-coated steel for HQ and HW, in accordance with DIN EN ISO 13857.

□ **Speed control**
All types are steplessly controllable through the speed-potentiometer. Furthermore, control is also possible via three-step switch or steplessly via universal control system or electronic differential pressure/temperature controller. See table below. the example performance stages are shown in the characteristic curves.

□ **Installation**
Installation in any position.

□ **Sound levels**
Sum levels and spectrum figures for sound power and sound pressure levels in 4 m free field conditions are specified above the characteristic curve for a medium intake/exhaust operating point. The sound pressure sum level in 4 m (free field conditions) is also shown in the table below and the table below the characteristic curve for different voltages.
Sound emissions and room acoustics see page 10.

R.P.M.	Air flow volume (FID)	Motor power	Current	Sound pressure	Wiring diagram	max. air flow temperature	Weight net approx.	Type					
								HQ EC incl. guard	Ref. no.	HW EC incl. guard	Ref. no.	HRF EC	Ref. no.
min^{-1}	V m^3/h	kW	A	dB(A) in 4 m	No.	+°C	kg						
1 ph. motor, 1~ 230 Volt, 50/60 Hz, EC motor, protection to IP 44													
1500	3220	0.15	1.20	50	1046	40	9.0	**HQW EC 355 A**	4916	**HWW EC 355 A**	4917	**HRFW EC 355 A**	4918
1980	4200	0.32	1.40	59	1047	40	12.0	**HQW EC 355 B**	4919	**HWW EC 355 B**	4920	**HRFW EC 355 B**	4921

355 A

Frequency		Hz	Total	125	250	500	1k	2k	4k	8k
L_{WA}	Air noise	dB(A)	70	48	61	65	65	63	57	47
$L_{PA,\ 4\ m}$	Air noise	dB(A)	50	28	41	45	45	43	37	27

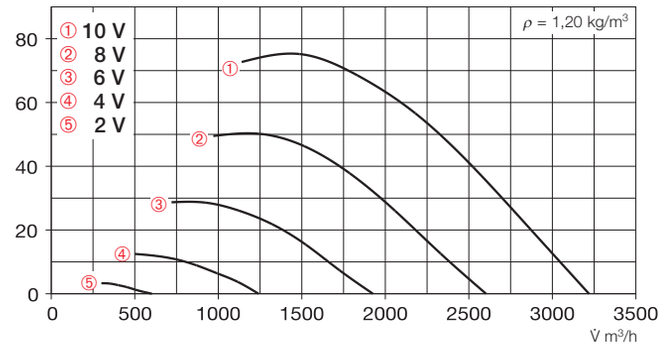

Voltage V	n min⁻¹	Free discharge V̇ m³/h	P_{el} (W)	I_{Motor} (A)	$L_{PA,\ 4\ m}$
10	1500	3220	146	1,2	50
8	1225	2600	84	0,66	46
6	930	1930	40	0,33	40
4	610	1240	20	0,15	31

355 B

Frequency		Hz	Total	125	250	500	1k	2k	4k	8k
L_{WA}	Air noise	dB(A)	79	52	73	73	73	73	67	59
$L_{PA,\ 4\ m}$	Air noise	dB(A)	59	32	53	53	53	53	47	39

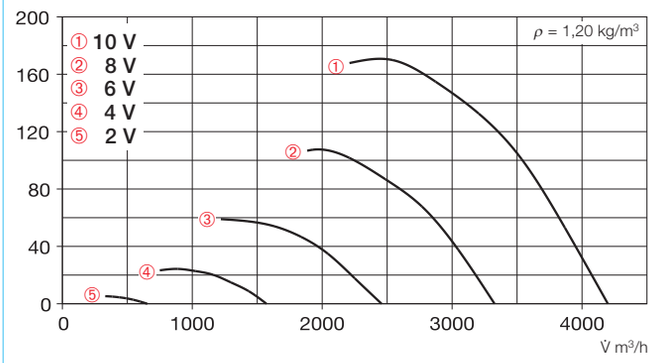

Voltage V	n min⁻¹	Free discharge V̇ m³/h	P_{el} (W)	I_{Motor} (A)	$L_{PA,\ 4\ m}$
10	1980	4200	316	1,4	59
8	1600	3330	175	0,79	54
6	1170	2460	80	0,37	48
4	760	1570	30	0,20	39

EC Axial fans

Accessories for HRF EC Description see page 231 on

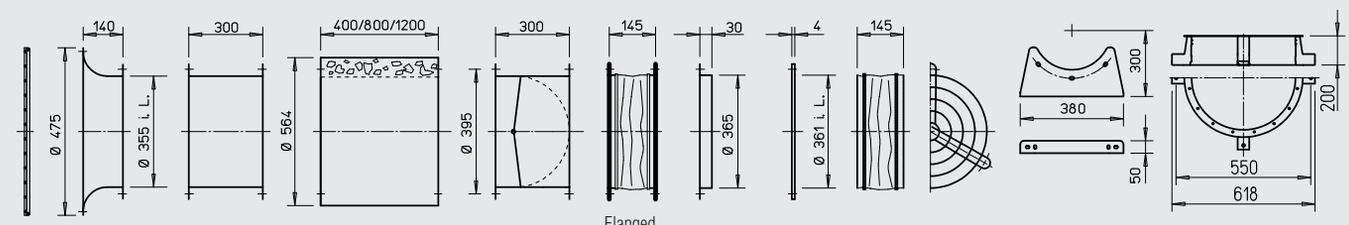

Bell mouth + guard **ASD-SGD 355** No. 1417

Extension duct **VR 355** No. 1405

Circular attenuator **RSD 355/..**

Automatic back-draught shutter **RVS 355** a) No. 2595

Flanged flex. connector **STS 355** b) No. 1222

Counter-flange **FR 355** No. 1205

Flat flange **FF 355** No. 4944

Flexible sleeve **FM 355** b) No. 1675

Guard **SG 355** No. 1238

Mounting feet **MK 355** (1 set = 2 pcs.) No. 1448

Mounting ring for vertical installation **MRV 355** No. 1759

a) Motorised backdraught shutter see Accessories product pages

Information	Page
Techn. description	140
Selection chart	141
Information for planning	10 on

Made to order designs
Alternative voltages, protection classes, air flow direction, air flow temperature, acid protection and cast aluminium impellers are available on request.

Note the technical information on page 15 on.

Other accessories	Page
Filters and attenuators	421 on
Backdraught shutters and grilles	487 on
Universal control system, electronic controller, speed-potentiometer	539 on

Universal control system		Speed-potentiometer flush		Speed-potentiometer surface		Three-step speed switch flush		Three-step speed switch surface		Electronic diff. pressure controller/switch		Electronic temperature controller/switch	
Type	Ref. no.	**Type**	Ref. no.	**Type**	Ref. no.	**Type**	Ref. no.	**Type**	Ref. no.	**Type**	Ref. no.	**Type**	Ref. no.
EUR EC 1)	1347	**PU 10** 1)	1734	**PA 10** 1)	1735	**SU-3 10** 1)	4266	**SA-3 10** 1)	4267	**EDR** 1)	1437	**ETR** 1)	1438
EUR EC 1)	1347	**PU 10** 1)	1734	**PA 10** 1)	1735	**SU-3 10** 1)	4266	**SA-3 10** 1)	4267	**EDR** 1)	1437	**ETR** 1)	1438

1) Several EC fans can normally be connected, see Accessories

HQ EC

HW EC

HRF EC

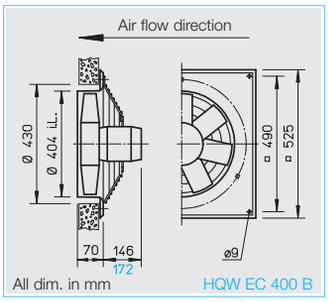

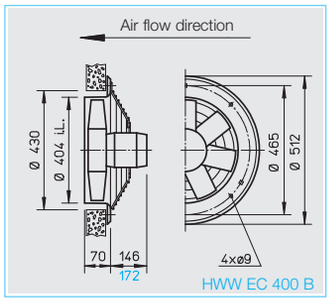

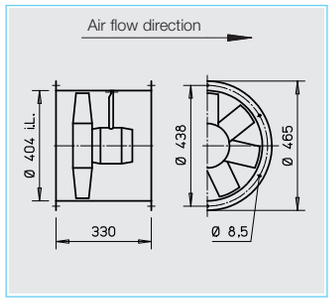

ECgreen Vent 55% Saving * * with speed control

■ **Specification for all types**

□ **Casing**
Manufactured in galvanised sheet steel. Models HQ and HW have the additional protection of two coats of papyrus white.

□ **Impeller**
Highly efficient with profiled polymer blades, aerodynamically optmised for application, dynamically balanced. Operating range from –30 to +60 °C.

□ **Motor**
Energy-saving, speed-controllable EC external rotor motor protected to IP 54 with high level of efficiency. Maintenance-free and interference-free, excellent electromagnetic compatibility (EMC), ball bearing mounted.

□ **Motor protection**
Integrated electronic temperature monitoring for EC motor and electronics.

□ **Electrical connection**
Standard terminal box (protection to IP 54) For HQ and HW types mounted to running cable ("A") or on the back of the motor ("B"). For HRF types on the outside of the ducting.

□ **Guard**
Made from powder-coated steel for HQ and HW, in accordance with DIN EN ISO 13857.

□ **Speed control**
All types are steplessly controllable through the speed-potentiometer. Furthermore, control is also possible via three-step switch or steplessly via universal control system or electronic differential pressure/temperature controller. See table below. the example performance stages are shown in the characteristic curves.

□ **Installation**
Installation in any position.

□ **Sound levels**
Sum levels and spectrum figures for sound power and sound pressure levels in 4 m free field conditions are specified above the characteristic curve for a medium intake/exhaust operating point. The sound pressure sum level in 4 m (free field conditions) is also shown in the table below and the table below the characteristic curve for different voltages.
Sound emissions and room acoustics see page 10.

R.P.M.	Air flow volume (FID)	Motor power	Current	Sound pressure	Wiring diagram	max. air flow temperature	Weight net approx.	Type					
								HQ EC incl. guard	Ref. no.	**HW EC** incl. guard	Ref. no.	**HRF EC**	Ref. no.
min^{-1}	V m^3/h	kW	A	dB(A) in 4 m	No.	+°C	kg						
1 ph. motor, 1~ 230 Volt, 50/60 Hz, EC motor, protection to IP 54													
1700	4790	0.32	1.40	59	1047	40	13.4	**HQW EC 400 A**	4922	**HWW EC 400 A**	4923	**HRFW EC 400 A**	4924
2150	5850	0.65	3.10	65	1048	40	15.4	**HQW EC 400 B**	4925	**HWW EC 400 B**	4926	**HRFW EC 400 B**	4927

400 A

Frequency		Hz	Total	125	250	500	1k	2k	4k	8k
L_{WA}	Air noise	dB(A)	79	52	72	74	73	71	65	57
$L_{PA,\ 4\ m}$	Air noise	dB(A)	59	32	53	54	53	51	45	37

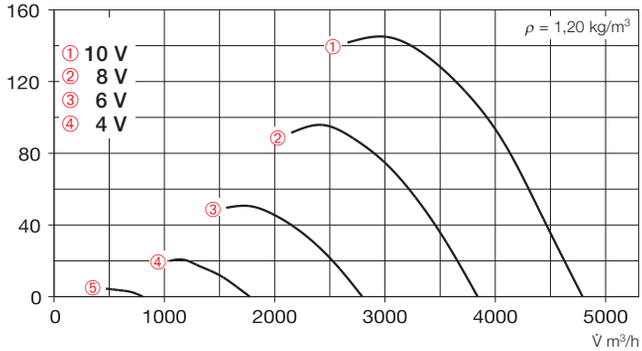

Voltage V	n min⁻¹	Free discharge V̇ m³/h	P_{el} (W)	I_{Motor} (A)	$L_{PA,\ 4\ m}$
10	1700	4790	320	1,4	59
8	1380	3840	170	0,75	55
6	1000	2800	75	0,35	48
4	650	1780	30	0,20	39

400 B

Frequency		Hz	Total	125	250	500	1k	2k	4k	8k
L_{WA}	Air noise	dB(A)	85	57	75	80	80	78	71	63
$L_{PA,\ 4\ m}$	Air noise	dB(A)	65	37	55	60	60	58	51	43

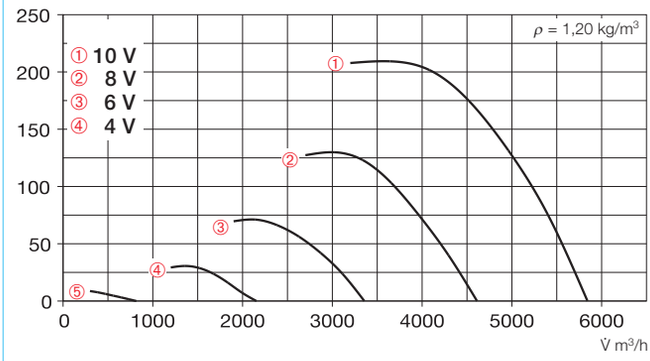

Voltage V	n min⁻¹	Free discharge V̇ m³/h	P_{el} (W)	I_{Motor} (A)	$L_{PA,\ 4\ m}$
10	2150	5850	650	3,10	65
8	1700	4630	340	1,60	60
6	1250	3370	150	0,71	53
4	800	2120	60	0,35	44

EC Axial fans

Accessories for HRF EC Description see page 231 on

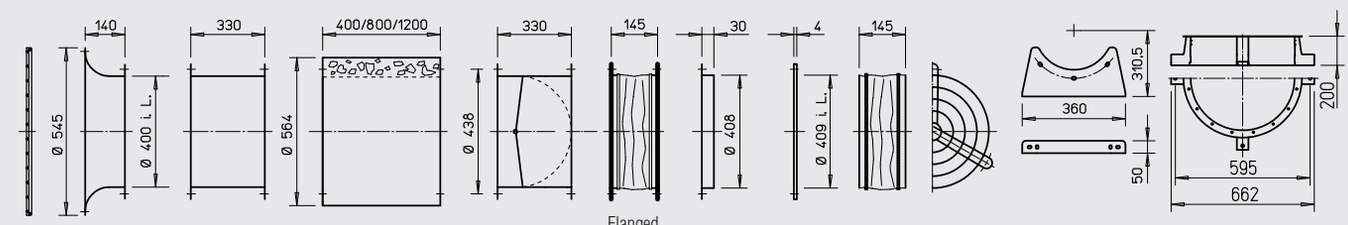

Bell mouth + guard **ASD-SGD 400** No. 1418

Extension duct **VR 400** No. 1406

Circular attenuator **RSD 400/..**

Automatic back-draught shutter **RVS 400** a) No. 2596

Flanged flex. connector **STS 400** b) No. 1223

Counter-flange **FR 400** No. 1206

Flat flange **FF 400** No. 4945

Flexible sleeve **FM 400** b) No. 1676

Guard **SG 400** No. 1239

Mounting feet **MK 400** (1 set = 2 pcs.) No. 1449

Mounting ring for vertical installation **MRV 400** No. 1760

a) Motorised backdraught shutter see Accessories product pages

Information	Page
Techn. description	140
Selection chart	141
Information for planning	10 on

Made to order designs
Alternative voltages, protection classes, air flow direction, air flow temperature, acid protection and cast aluminium impellers are available on request.

Note the technical information on page 15 on.

Other accessories	Page
Filters and attenuators	421 on
Backdraught shutters and grilles	487 on
Universal control system, electronic controller, speed-potentiometer	539 on

Universal control system		Speed-potentiometer flush		Speed-potentiometer surface		Three-step speed switch flush		Three-step speed switch surface		Electronic diff. pressure controller/switch		Electronic temperature controller/switch	
Type	Ref. no.	**Type**	Ref. no.	**Type**	Ref. no.	**Type**	Ref. no.	**Type**	Ref. no.	**Type**	Ref. no.	**Type**	Ref. no.
EUR EC 1)	1347	**PU 10** 1)	1734	**PA 10** 1)	1735	**SU-3 10** 1)	4266	**SA-3 10** 1)	4267	**EDR** 1)	1437	**ETR** 1)	1438
EUR EC 1)	1347	**PU 10** 1)	1734	**PA 10** 1)	1735	**SU-3 10** 1)	4266	**SA-3 10** 1)	4267	**EDR** 1)	1437	**ETR** 1)	1438

1) Several EC fans can normally be connected, see Accessories

HQ EC

HW EC

HRF EC

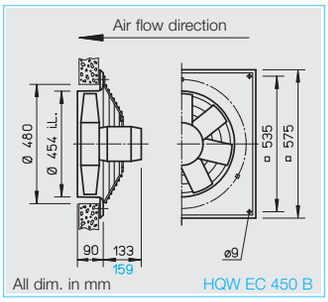

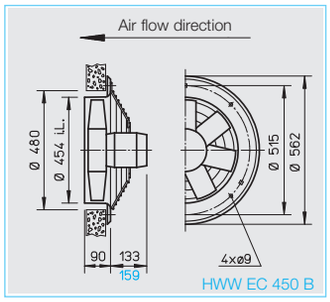

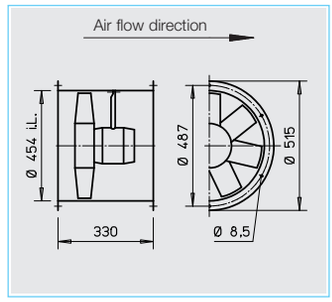

ECgreen Vent

55% Saving *

** with speed control*

■ **Specification for all types**

□ **Casing**
Manufactured in galvanised sheet steel. Models HQ and HW have the additional protection of two coats of papyrus white.

□ **Impeller**
Highly efficient with profiled polymer blades, aerodynamically optmised for application, dynamically balanced. Operating range from –30 to +60 °C.

□ **Motor**
Energy-saving, speed-controllable EC external rotor motor protected to IP 54 with high level of efficiency. Maintenance-free and interference-free, excellent electromagnetic compatibility (EMC), ball bearing mounted.

□ **Motor protection**
Integrated electronic temperature monitoring for EC motor and electronics.

□ **Electrical connection**
Standard terminal box (protection to IP 54) For HQ and HW types mounted to running cable ("A") or on the back of the motor ("B"). For HRF types on the outside of the ducting.

□ **Guard**
Made from powder-coated steel for HQ and HW, in accordance with DIN EN ISO 13857.

□ **Speed control**
All types are steplessly controllable through the speed-potentiometer. Furthermore, control is also possible via three-step switch or steplessly via universal control system or electronic differential pressure/temperature controller. See table below. the example performance stages are shown in the characteristic curves.

□ **Installation**
Installation in any position.

□ **Sound levels**
Sum levels and spectrum figures for sound power and sound pressure levels in 4 m free field conditions are specified above the characteristic curve for a medium intake/exhaust operating point. The sound pressure sum level in 4 m (free field conditions) is also shown in the table below and the table below the characteristic curve for different voltages.
Sound emissions and room acoustics see page 10.

R.P.M.	Air flow volume (FID)	Motor power	Current	Sound pressure	Wiring diagram	max. air flow temperature	Weight net approx.	Type					
								HQ EC incl. guard	Ref. no.	HW EC incl. guard	Ref. no.	HRF EC	Ref. no.
min^{-1}	$V\ m^3/h$	kW	A	dB(A) in 4 m	No.	+°C	kg						
1 ph. motor, 1~ 230 Volt, 50/60 Hz, EC motor, protection to IP 54													
1320	5460	0.29	1.30	55	1047	40	14.5	**HQW EC 450 A**	4928	**HWW EC 450 A**	4929	**HRFW EC 450 A**	4930
1835	7640	0.82	3.80	64	1048	40	16.5	**HQW EC 450 B**	4931	**HWW EC 450 B**	4932	**HRFW EC 450 B**	4933

450 A

Frequency		Hz	Total	125	250	500	1k	2k	4k	8k
L_{WA}	Air noise	dB(A)	75	49	68	71	68	67	61	52
$L_{PA,\ 4\ m}$	Air noise	dB(A)	55	29	48	51	48	47	41	32

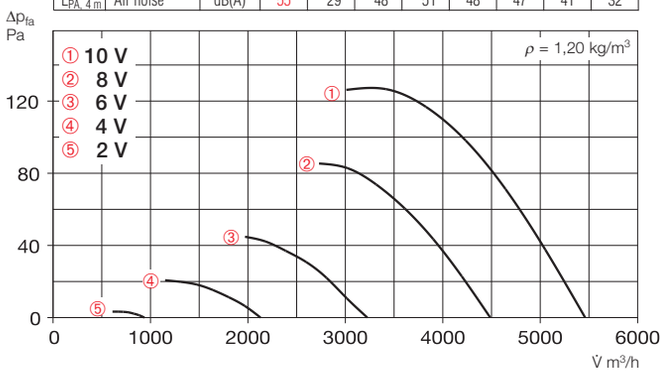

Voltage V	n min⁻¹	Free discharge V̇ m³/h	P_{el} (W)	I_{Motor} (A)	$L_{PA,\ 4\ m}$
10	1320	5460	290	1,3	55
8	1090	4490	170	0,74	51
6	790	3230	75	0,35	44
4	525	2130	30	0,20	35

450 B

Frequency		Hz	Total	125	250	500	1k	2k	4k	8k
L_{WA}	Air noise	dB(A)	84	54	75	78	79	78	73	67
$L_{PA,\ 4\ m}$	Air noise	dB(A)	64	34	55	58	59	58	53	47

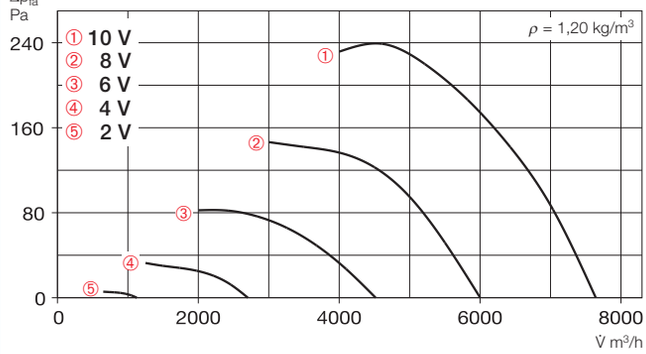

Voltage V	n min⁻¹	Free discharge V̇ m³/h	P_{el} (W)	I_{Motor} (A)	$L_{PA,\ 4\ m}$
10	1835	7640	820	3,80	64
8	1460	6000	420	2,00	59
6	1080	4520	180	0,84	53
4	690	2700	60	0,37	43

EC Axial fans

Accessories for HRF EC Description see page 231 on

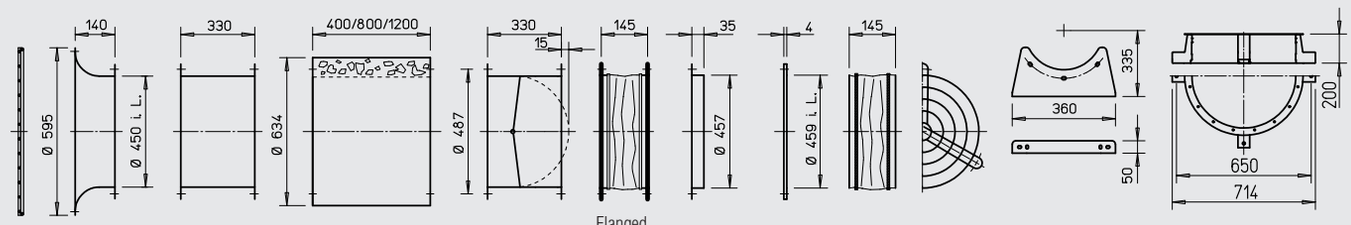

Bell mouth + guard **ASD-SGD 450** No. 1419

Extension duct **VR 450** No. 1407

Circular attenuator **RSD 450/..**

Automatic back-draught shutter **RVS 450** a) No. 2597

Flanged flex. con-nector **STS 450** b) No. 1224

Counter-flange **FR 450** No. 1207

Flat flange **FF 450** No. 4946

Flexible sleeve **FM 450** b) No. 1677

Guard **SG 450** No. 1240

Mounting feet **MK 450** (1 set = 2 pcs.) No. 1449

Mounting ring for vertical installation **MRV 450** No. 1761

a) Motorised backdraught shutter see Accessories product pages

Information	Page
Techn. description	140
Selection chart	141
Information for planning	10 on

Made to order designs
Alternative voltages, protection classes, air flow direction, air flow temperature, acid protection and cast aluminium impellers are available on request.

Note the technical information on page 15 on.

Other accessories	Page
Filters and attenuators	421 on
Backdraught shutters and grilles	487 on
Universal control system, electronic controller, speed-potentiometer	539 on

Universal control system		Speed-potentiometer flush		Speed-potentiometer surface		Three-step speed switch flush		Three-step speed switch surface		Electronic diff. pressure controller/switch		Electronic temperature controller/switch	
Type	Ref. no.	**Type**	Ref. no.	**Type**	Ref. no.	**Type**	Ref. no.	**Type**	Ref. no.	**Type**	Ref. no.	**Type**	Ref. no.
EUR EC 1)	1347	**PU 10** 1)	1734	**PA 10** 1)	1735	**SU-3 10** 1)	4266	**SA-3 10** 1)	4267	**EDR** 1)	1437	**ETR** 1)	1438
EUR EC 1)	1347	**PU 10** 1)	1734	**PA 10** 1)	1735	**SU-3 10** 1)	4266	**SA-3 10** 1)	4267	**EDR** 1)	1437	**ETR** 1)	1438

1) Several EC fans can normally be connected, see Accessories

HQ EC

HW EC

HRF EC

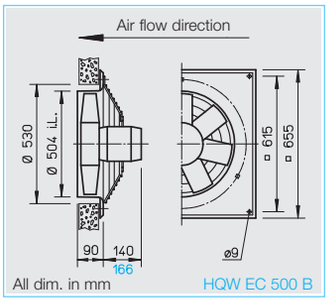

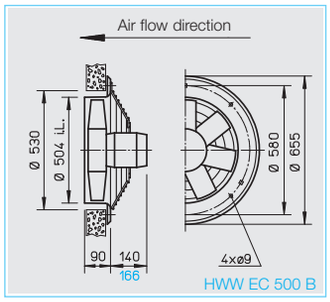

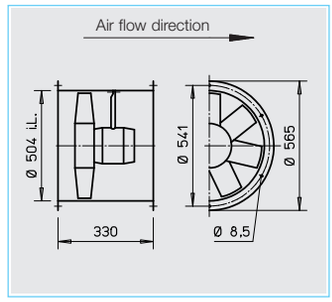

■ Specification for all types

□ Casing
Manufactured in galvanised sheet steel. Models HQ and HW have the additional protection of two coats of papyrus white.

□ Impeller
Highly efficient with profiled polymer blades, aerodynamically optmised for application, dynamically balanced. Operating range from –30 to +60 °C.

□ Motor
Energy-saving, speed-controllable EC external rotor motor protected to IP 54 with high level of efficiency. Maintenance-free and interference-free, excellent electromagnetic compatibility (EMC), ball bearing mounted.

□ Motor protection
Integrated electronic temperature monitoring for EC motor and electronics.

□ Electrical connection
Standard terminal box (protection to IP 54) For HQ and HW types mounted to running cable ("A") or on the back of the motor ("B"). For HRF types on the outside of the ducting.

□ Guard
Made from powder-coated steel for HQ and HW, in accordance with DIN EN ISO 13857.

□ Speed control
All types are steplessly controllable through the speed-potentiometer. Furthermore, control is also possible via three-step switch or steplessly via universal control system or electronic differential pressure/temperature controller. See table below. the example performance stages are shown in the characteristic curves.

□ Installation
Installation in any position.

□ Sound levels
Sum levels and spectrum figures for sound power and sound pressure levels in 4 m free field conditions are specified above the characteristic curve for a medium intake/exhaust operating point. The sound pressure sum level in 4 m (free field conditions) is also shown in the table below and the table below the characteristic curve for different voltages.
Sound emissions and room acoustics see page 10.

R.P.M.	Air flow volume (FID)	Motor power	Current	Sound pressure	Wiring diagram	max. air flow temperature	Weight net approx.	Type					
								HQ EC incl. guard	Ref. no.	HW EC incl. guard	Ref. no.	HRF EC	Ref. no.
min^{-1}	$V\ m^3/h$	kW	A	dB(A) in 4 m	No.	+°C	kg						
1 ph. motor, 1~ 230 Volt, 50/60 Hz, EC motor, protection to IP 54													
1090	6320	0.29	1.30	54	1047	40	15.7	**HQW EC 500 A**	4934	**HWW EC 500 A**	4935	**HRFW EC 500 A**	4936
1450	8300	0.67	3.00	62	1048	40	17.7	**HQW EC 500 B**	4937	**HWW EC 500 B**	4938	**HRFW EC 500 B**	4939

500 A

Frequency		Hz	Total	125	250	500	1k	2k	4k	8k
L_{WA}	Air noise	dB(A)	74	54	67	68	69	67	62	55
$L_{PA,\ 4\ m}$	Air noise	dB(A)	54	34	47	48	49	47	42	35

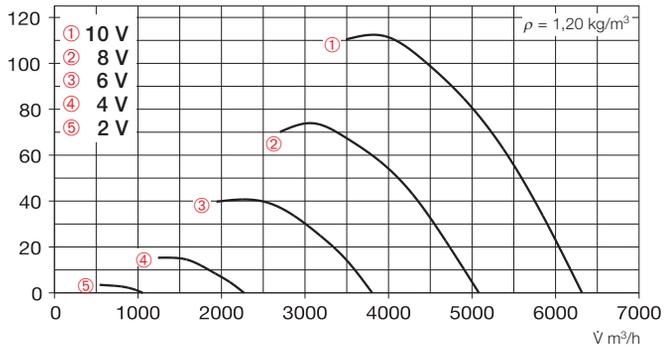

Voltage V	n min⁻¹	Free discharge V̇ m³/h	P_{el} (W)	I_{Motor} (A)	$L_{PA,\ 4\ m}$
10	1090	6320	290	1,3	54
8	880	5080	150	0,68	50
6	665	3800	70	0,34	44
4	400	2270	25	0,20	33

500 B

Frequency		Hz	Total	125	250	500	1k	2k	4k	8k
L_{WA}	Air noise	dB(A)	82	56	72	76	77	75	72	63
$L_{PA,\ 4\ m}$	Air noise	dB(A)	62	36	52	56	57	55	52	43

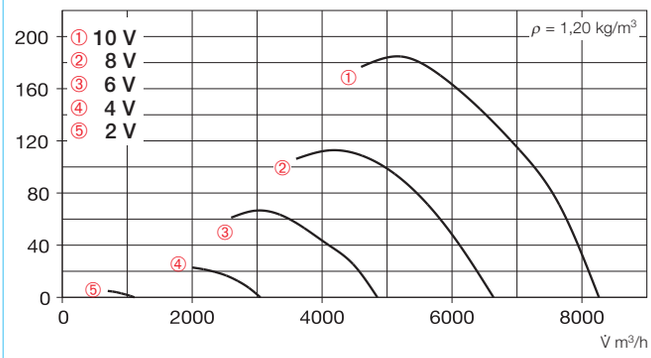

Voltage V	n min⁻¹	Free discharge V̇ m³/h	P_{el} (W)	I_{Motor} (A)	$L_{PA,\ 4\ m}$
10	1450	8300	670	3,00	62
8	1160	6640	350	1,70	57
6	860	4850	160	0,75	51
4	540	3050	55	0,34	41

EC Axial fans

Accessories for HRF EC Description see page 231 on

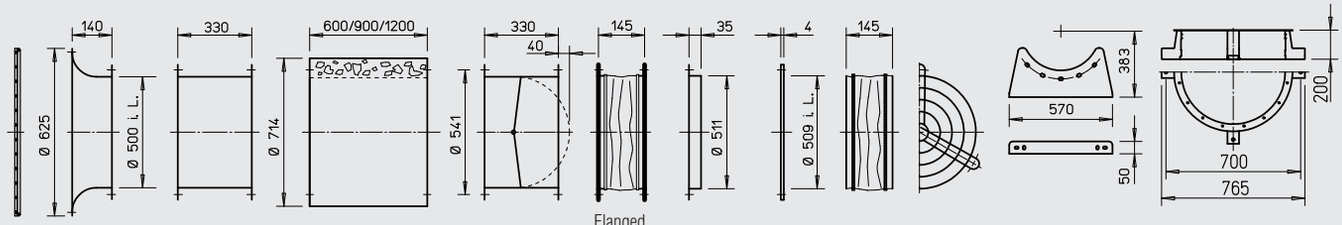

Bell mouth + guard **ASD-SGD 500** No. 1420

Extension duct **VR 500** No. 1408

Circular attenuator **RSD 500/..**

Automatic back-draught shutter **RVS 500** a) No. 2598

Flanged flex. connector **STS 500** b) No. 1225

Counter-flange **FR 500** No. 1208

Flat flange **FF 500** No. 4947

Flexible sleeve **FM 500** b) No. 1678

Guard **SG 500** No. 1241

Mounting feet **MK 500** (1 set = 2 pcs.) No. 1450

Mounting ring for vertical installation **MRV 500** No. 1740

a) Motorised backdraught shutter see Accessories product pages

Information	Page
Techn. description	140
Selection chart	141
Information for planning	10 on

Made to order designs
Alternative voltages, protection classes, air flow direction, air flow temperature, acid protection and cast aluminium impellers are available on request.

Note the technical information on page 15 on.

Other accessories	Page
Filters and attenuators	421 on
Backdraught shutters and grilles	487 on
Universal control system, electronic controller, speed-potentiometer	539 on

Universal control system		Speed-potentiometer flush		Speed-potentiometer surface		Three-step speed switch flush		Three-step speed switch surface		Electronic diff. pressure controller/switch		Electronic temperature controller/switch	
Type	Ref. no.	**Type**	Ref. no.	**Type**	Ref. no.	**Type**	Ref. no.	**Type**	Ref. no.	**Type**	Ref. no.	**Type**	Ref. no.
EUR EC 1)	1347	**PU 10** 1)	1734	**PA 10** 1)	1735	**SU-3 10** 1)	4266	**SA-3 10** 1)	4267	**EDR** 1)	1437	**ETR** 1)	1438
EUR EC 1)	1347	**PU 10** 1)	1734	**PA 10** 1)	1735	**SU-3 10** 1)	4266	**SA-3 10** 1)	4267	**EDR** 1)	1437	**ETR** 1)	1438

1) Several EC fans can normally be connected, see Accessories

HQ

HW

HS

HRF

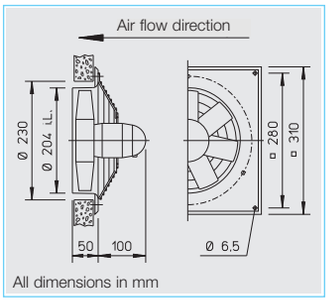

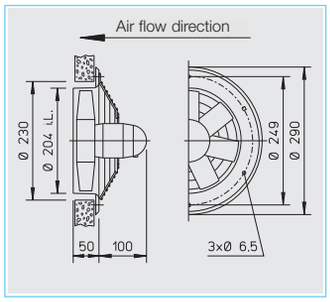

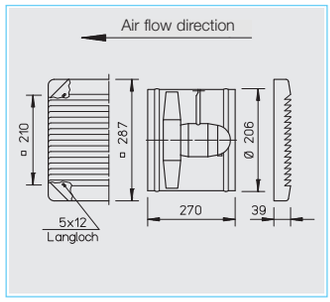

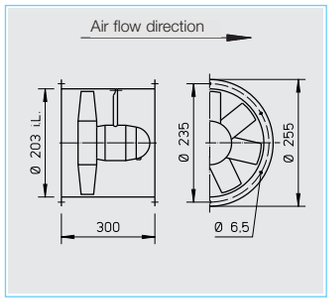

■ Specification for all models

□ Casing
Manufactured in galvanised sheet steel. Model HQ and HW have an additional two-layer finishing in papyrus white.

□ Impeller
Highly efficient, profiled blade impeller, dynamically balanced and manufactured from impact resistant polymers. Suitable for –30 to +60 °C.

□ Motor
Totally enclosed motor with a die-cast aluminium casing, protected to IP 54. Ball bearing mounted. Maintenance-free and interference-free. Humidity protection of windings. For maximum air flow temperature see table below.

□ Motor protection
All models have automatically resetting thermal contacts wired in series with the motor windings.

□ Electrical connection
Terminal box (IP 54) mounted on rear of motor as standard. Also on outside of piping for HRF.

□ Guard
Powder-coated steel wire for HQ (Ex-models galvanised) according to DIN EN ISO 13857.

□ Speed control
All models are speed controllable by voltage reduction (transformer controller or electronic controller) For according air flow volume see performance curve.

□ Reversed operation
All models are reversible when wired to a DSEL reversing switch. For reverse air flow direction allow for 1/3 drop in performance.

□ Installation
Installation in any position. Ensure that the motor drainage holes face downwards.

□ Sound levels
See characteristic curve. The sound power and sound pressure are specified at 1 m distances under free field conditions, for average operating point suction/pressure side. See page 10 on for sound emission and acoustics.

Information	Page
Techn. description	140
Selection chart	141
Information for planning	10 on

Made to order designs
Alternative voltages, protection classes, air flow direction, air flow temperature, acid protection and cast aluminium impellers are available on request.

Note the technical information on page 15 on.

R.P.M.	Air flow volume (FID)	Motor power	Current* standard-supply	Current* max. controlled	Wiring diagram	max. air flow temp. standard supply	max. air flow temp. speed controlled	Weight net	Model: HQ incl. guard	Ref. no.	HW incl. guard	Ref. no.	HS incl. guard	Ref. no.	HRF	Ref. no.
min-1	V m3/h	W	A	A	No.	+°C	+°C	kg								
1 Phase motor, 230 Volt / 50 Hz, capacitor motor, protection to IP 54																
1360	520	25	0.11	0.11	439[1)]	60	40	3.8	**HQW 200/4**	7537	**HWW 200/4**	7538	**HSW 200/4**	7502	**HRFW 200/4**[1)]	7540
2250	930	66	0.26	0.31	439[1)]	40	40	2.7	**HQW 200/2**	0960	—	—	**HSW 200/2**	7503	**HRFW 200/2**[1)]	0199

[1)] Type HRFW: connect pursuant to wiring diagram no. SS-962.

200/2

Frequency		Hz	Total	125	250	500	1k	2k	4k	8k
L_{WA}	Air noise	dB(A)	63	33	50	59	59	54	53	45
$L_{PA,1m}$	Air noise	dB(A)	55	25	42	51	51	46	45	37

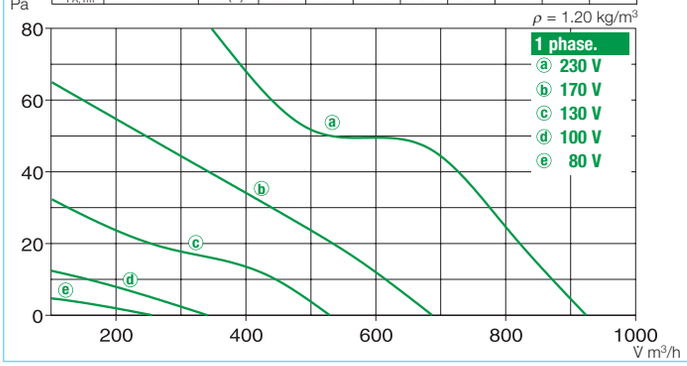

200/4

Frequency		Hz	Total	125	250	500	1k	2k	4k	8k
L_{WA}	Air noise	dB(A)	50	32	38	42	44	44	41	33
$L_{PA,1m}$	Air noise	dB(A)	42	24	30	34	36	36	33	25

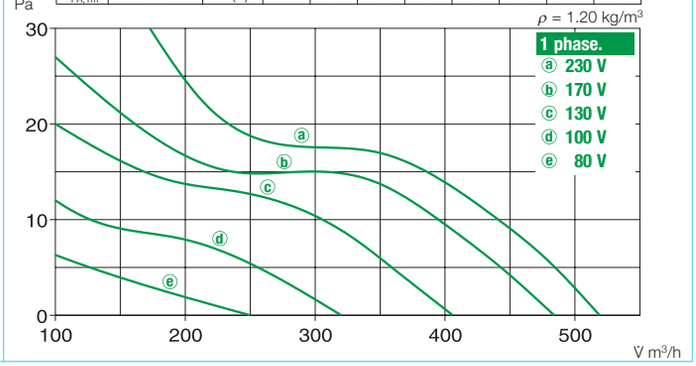

Accessories for HRF Description see page 230 on

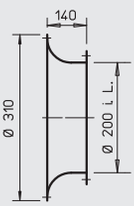

Bell mount
ASD 200
No. 1388

Flang. flex. connector
STS 200
No. 1219

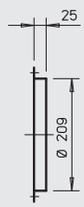

Counter-flange
FR 200
No. 1202

Flexible sleeve
FM 200
No. 1670

Guard
SG 200
No. 1216

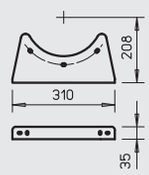

2 mounting feet
1 x MK 200
(= 2 pcs.)
No. 1446

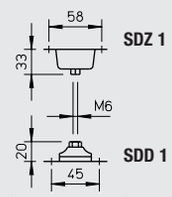

4 vibration dampers for suspension
1 x SDZ 1 (= 4 pcs.) No. 1454
4 vibration dampers for compression
1 x SDD 1 (= 4 pcs.) No. 1452

	Transformer controller for 5 speed		Electronic controller, stepless flush/surf.		Reversing switch		Electronic controller with reversing switch	
	Model	Ref. no.	**Model**	Ref. no.	**Model**	Ref. no.	**Model**	Ref. no.
	TSW 0,3	3608	**ESU 1/ESA 1**	0236/0238	**DSEL 2**	1306	**BSX**	0240
	TSW 0,3	3608	**ESU 1/ESA 1**	0236/0238	**DSEL 2**	1306	**BSX**	0240

Other accessories	Page
Extension tube for HS	
Type VH 200 Ref. no. 1349	
Cylindrical duct, galvanised steel, length: 150 mm.	
Attenuators	421 on
Shutters and grilles	487 on
Speed controllers and switches	525 on

HQ

HW

HS

HRF

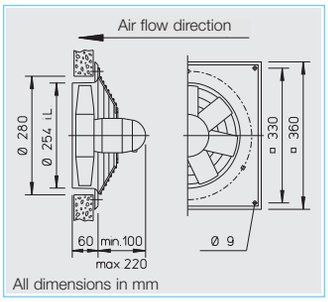

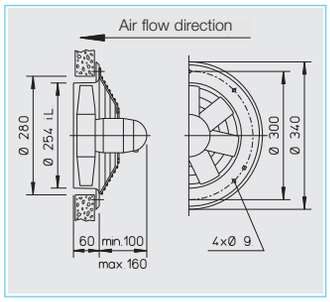

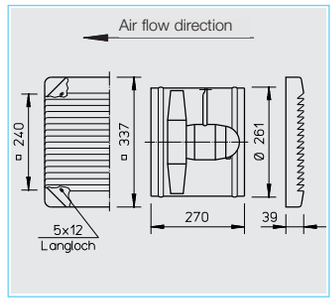

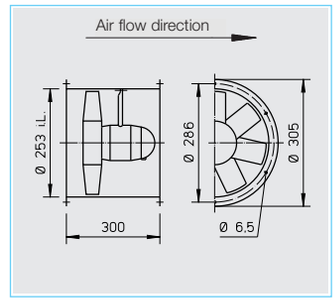

■ Specification for all models

□ Casing
Manufactured in galvanised sheet steel. Model HQ and HW have an additional two-layer finishing in papyrus white. Ex-models without paint.

□ Impeller
Highly efficient, profiled blade impeller, dynamically balanced and manufactured from impact resistant polymers. Suitable for –30 to +60 °C. Deviation for ex-models.

□ Motor
Totally enclosed motor with a die-cast aluminium casing, protected to IP 55 or IP 54. Ball bearing mounted. Maintenance-free and interference-free. Humidity protection of windings. For maximum air flow temperature see table below. Deviation for ex-models.

□ Motor protection
All models (3~ explosion proof excluded) have thermal contacts as standard which must be connected to a motor protection unit (see below). The models H..W 250/6, H..W 250/4 and all 1 ph. ex-proof fans have automatic resetting thermal contacts wired in series with the motor windings.

□ Electrical connection
Terminal box (IP 54/55) mounted on rear of motor as standard. Also on outside of piping for HRF. Deviation for ex-models.

□ Guard
Powder-coated steel wire for HQ and HW (HQ ex-models galvanised) according to DIN EN ISO 13857.

□ Speed control
For all speed controllable models the current are identified with a value in the "speed controlled" column of the table below which must be used when selecting a controller. Possible allocations of frequency inverters are specified in the table below. The planned use of a frequency inverter without Sine filter must be stated when ordering. This requires a change of fan design and potential additional costs.
The air flow rates are shown in the performance curves.

□ Reversed operation
All models are reversible when wired to a reversing switch. For reverse air flow direction allow a loss in performance of approx. 1/3.

□ Installation
Installation in any position. Ensure that the motor drainage holes face downwards.

□ Dimensions
Pole-switch and explosion proof models may deviate from the information above.

□ Sound levels
See characteristic curve. The sound power and sound pressure are specified at 4 m distances under free field conditions, for average operating point suction/pressure side. See page 10 on for sound emission and acoustics. Deviation for ex-models.

□ Information	Page
Techn. description	140
Selection chart	141
Information for planning	10 on

R.P.M.	Air flow volume (FID)	Motor power	Current* standard-supply	Current* max. controlled	Wiring diagram	max. air flow temp. standard supply	max. air flow temp. speed controlled	Weight net	Model HQ incl. guard	Ref. no.	Model HW incl. guard	Ref. no.	Model HS incl. guard	Ref. no.	Model HRF	Ref. no.
min-1	V m3/h	W	A	A	No.	+°C	+°C	kg								
1 Phase motor, 230 Volt / 50 Hz, capacitor motor, protection to IP 54/IP 55																
930	660	35	0.20	0.22	317	60	40	6.5	**HQW 250/6**	1102	—	—	**HSW 250/6**	0139	—	—
1300	930	36	0.15	0.15	439 2)	60	40	7.5	**HQW 250/4** 1)	1103	**HWW 250/4** 1)	1001	**HSW 250/4** 1)	0140	**HRFW 250/4** 1)2)	0200
2710	2070	187	0.81	0.9	317 3)	60	40	6.5	**HQW 250/2**	1104	**HWW 250/2**	1002	**HSW 250/2**	0141	**HRFW 250/2** 3)	0201
3 Phase motor, 400 Volt / 50 Hz, squirrel cage motor protection to IP 55																
980	700	61	0.27	0.33	469	60	40	6.5	**HQD 250/6**	1114	—	—	—	—	—	—
1390	950	55	0.15	0.15	469	60	40	6.5	**HQD 250/4** 1)	1115	**HWD 250/4** 1)	1016	**HSD 250/4** 1)	0155	**HRFD 250/4** 1)	0220
2550	2000	169	0.31	0.33	469	60	40	6.5	**HQD 250/2**	1116	**HWD 250/2**	1017	—	—	**HRFD 250/2**	0221
2 speed motor, pole-switching, Dahlander windings, 400 Volt, 50 Hz, protection to IP 55																
1430/2770	1030/2110	58/212	0.16/0.43		472	60	—	8.5	**HQD 250/4/2**	1128	—	—	—	—	**HRFD 250/4/2**	0390
Explosion proof Ex d II B, 1 ph., 230 Volt, 50 Hz, protection to IP 55, temp. class T1-T3																
1400	1030	60*	0.70*		757	40	—	12	**HQW 250/4 Ex**	0438	—	—	—	—	**HRFW 250/4 Ex**	0437
2690	1950	180*	1.23*		757	40	—	13	**HQW 250/2 Ex**	1094	—	—	—	—	**HRFW 250/2 Ex**	1095
Explosion proof Ex e II, 3 ph., 400 Volt, 50 Hz, protection to IP 55, temp. class T1-T3																
1350	1070	120*	0.37*		470	40	—	12	**HQD 250/4 Ex**	1144	—	—	—	—	**HRFD 250/4 Ex**	0470
2800	2070	250*	0.75*		470	40	—	11	**HQD 250/2 Ex**	1145	—	—	—	—	**HRFD 250/2 Ex**	0471

* Motor nominal values, Ex see info page 16. 1) Special design not possible. 2) Type HRFW: connect using wiring diagram no. SS-962. 3) Type HRFW../2: connect using wiring diagram no. SS-963.

250/2

Frequency		Hz	Total	125	250	500	1k	2k	4k	8k
L_{WA}	Air noise	dB(A)	75	38	53	66	68	70	69	62
$L_{PA,4m}$	Air noise	dB(A)	55	18	33	46	48	49	48	42

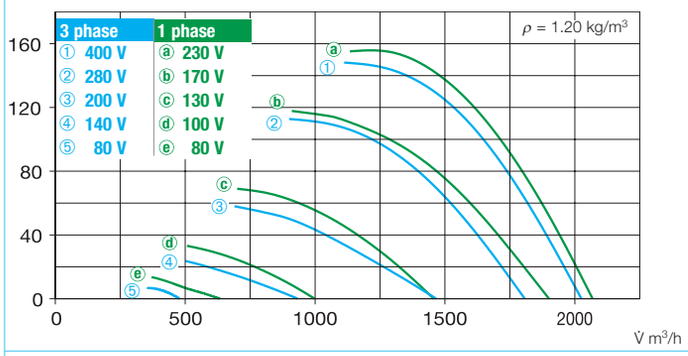

250/4 Three phase

Frequency		Hz	Total	125	250	500	1k	2k	4k	8k
L_{WA}	Air noise	dB(A)	64	50	54	61	57	55	50	41
$L_{PA,4m}$	Air noise	dB(A)	44	30	34	41	37	35	30	21

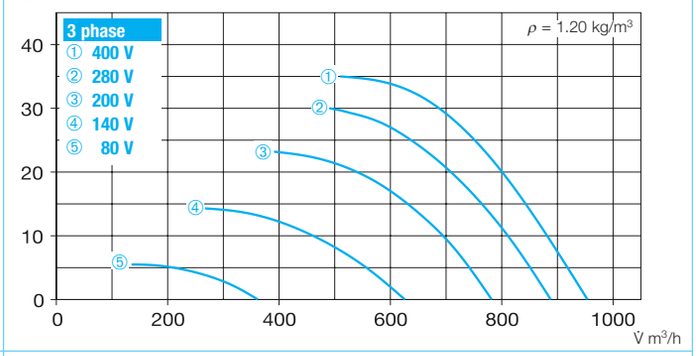

250/4 Single phase

Frequency		Hz	Total	125	250	500	1k	2k	4k	8k
L_{WA}	Air noise	dB(A)	55	37	43	47	49	49	46	38
$L_{PA,4m}$	Air noise	dB(A)	35	17	23	27	29	29	26	18

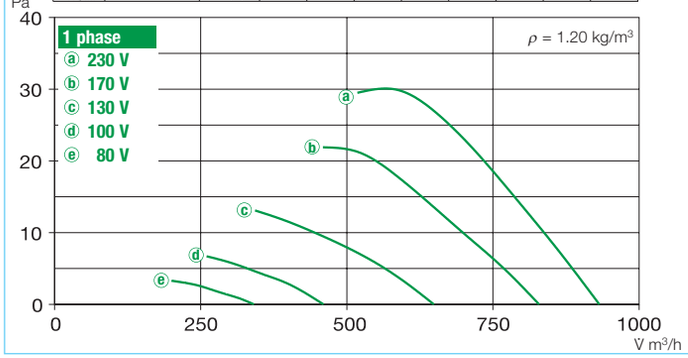

250/6

Frequency		Hz	Total	125	250	500	1k	2k	4k	8k
L_{WA}	Air noise	dB(A)	53	40	47	47	46	43	37	30
$L_{PA,4m}$	Air noise	dB(A)	33	20	27	27	26	23	17	10

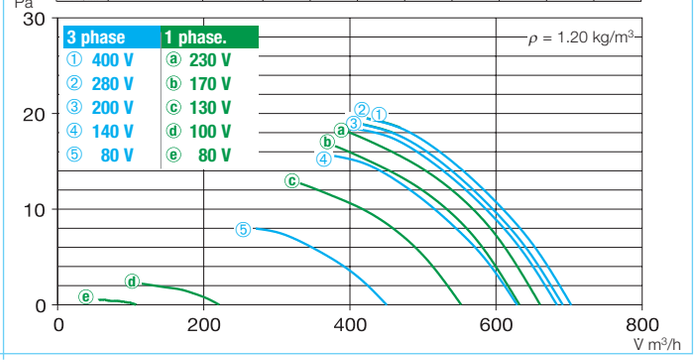

Accessories for HRF Description see page 230 on

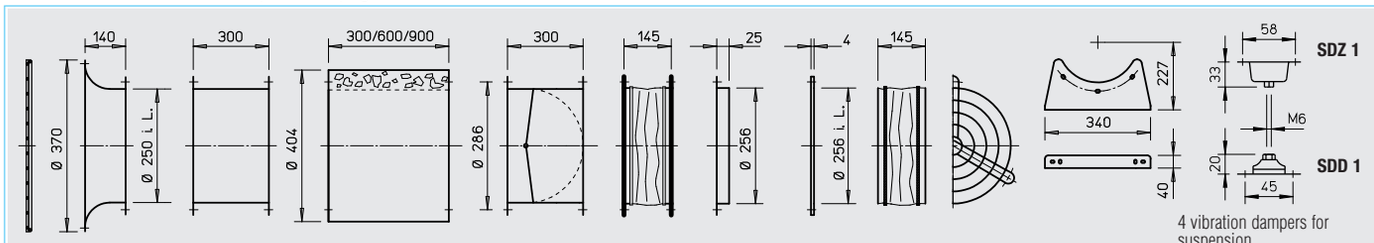

Bell mount with guard **ASD-SGD 250** No. 1414

Extension duct **VR 250** No. 1402

Circular attenuator **RSD 250/..**

Automatic back-draught shutter **RVS 250** a) No. 2592

Flang. flex. connector **STS 250** b) No. 1220

Counter flange **FR 250** No. 1203

Flat flange **FF 250** No.4941

Flexible sleeve **FM 250** b) No. 1672

Guard **SG 250** Nr. 1236

2 mounting feet **1 x MK 250** (= 2 pcs.) No. 1447

4 vibration dampers for suspension **1 x SDZ 1** (= 4 pcs.) No.1454

4 vibration dampers for compression **1 x SDD 1** (= 4 pcs.) No.1452

a) For motorised shutters see accessory page

b) Models for ex-proof fans see below

Frequency inverter with integrated Sine filter		Transformer controller 5-speed Pole switch		Electronic controller, stepless flush/surf.		Full motor protection for connection of integrated thermal contacts		Reversing switch	
Model	Ref. no.	**Model**	Ref. no.	**Model**	Ref. no.	**Model**	Ref. no.	**Model**	Ref. no.
—	—	**TSW 0,3**	3608	**ESU 1/ESA 1**	0236/0238	—	—	**WS**	1271
—	—	**TSW 0,3**	3608	**ESU 1/ESA 1**	0236/0238	—	—	**DSEL 2**	1306
—	—	**MWS 1,5**	1947	**ESU 3/ESA 3**	0237/0239	**MW**	1579	**WS**	1271
FU-BS 2,5[4]	5459	**RDS 1**[4]	1314	—	—	**MD**	5849	**WS**	1271
FU-BS 2,5[4]	5459	**RDS 1**[4]	1314	—	—	**MD**	5849	**WS**	1271
FU-BS 2,5[4]	5459	**RDS 1**[4]	1314	—	—	**MD**	5849	**WS**	1271
		Pole switch							
—	—	**PDA 12**[6]	5081	—	—	**M 3**[5]	1293	**PWDA**	1282
—	—	not permitted		not permitted		—	—	—	—
—	—	not permitted		not permitted		—	—	—	—
—	—	not permitted		not permitted		—	—	—	—
—	—	not permitted		not permitted		—	—	—	—

4) Incl. full motor protection. 5) Incl. pole switch. 6) See switch product page for flush mounted version

Other accessories Page

b) **Accessories for explosion proof fans**
Flanged flexible connector
Type STS 250 Ex Ref. no. 2501
Flexible sleeve
Type FM 250 Ex Ref. no. 1688

Extension tube for HS
Type VH 250 Ref. no. 1343
Cylindrical duct, galvanised steel, length: 150 mm.

Attenuators 421 on
Shutters and grilles 487 on
Speed controllers and switches 525 on

HQ

HW

HS

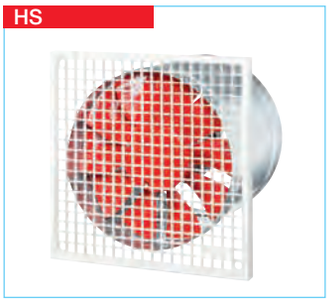

HRF

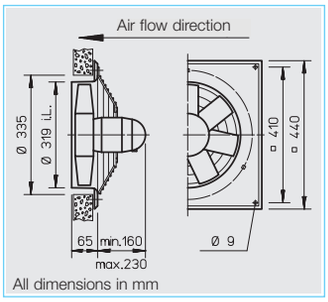

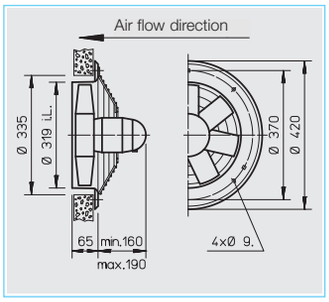

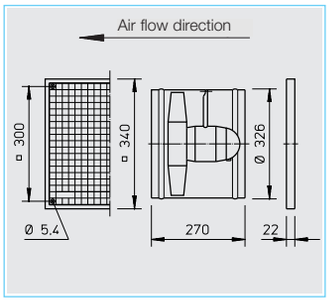

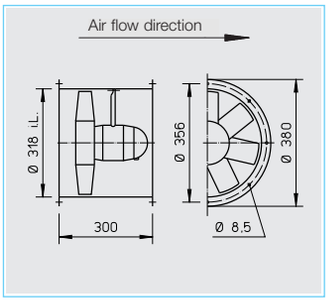

■ Specification for all models

☐ Casing
Manufactured in galvanised sheet steel. Model HQ and HW have an additional two-layer finishing in papyrus white. Ex-models without paint.

☐ Impeller
Highly efficient, profiled blade impeller, dynamically balanced and manufactured from impact resistant polymers. Suitable for –30 to +60 °C. Deviation for ex-models.

☐ Motor
Totally enclosed motor with a die-cast aluminium casing, protected to IP 55. Ball bearing mounted. Maintenance-free and interference-free. Humidity protection of windings. For maximum air flow temp. see table below. Deviation for ex-models.

☐ Motor protection
All models (3~ explosion proof excluded) have thermal contacts as standard which must be connected to a motor protection unit (see below). The models H..W 315/6 and all 1 ph. ex-proof fans have automatic resetting thermal contacts wired in series with the motor windings.

☐ Electrical connection
Terminal box (IP 55) mounted on rear of motor as standard. Also on outside of piping for HRF. Deviation for ex-models.

☐ Guard
Powder-coated steel wire for HQ and HW (HQ ex-models galvanised), polymer for HS according to DIN EN ISO 13857.

☐ Speed control
For all speed controllable models the current are identified with a value in the "speed controlled" column of the table below which must be used when selecting a controller. Possible allocations of frequency inverters are specified in the table below. The planned use of a frequency inverter without Sine filter must be stated when ordering. This requires a change of fan design and potential additional costs.
The air flow rates are shown in the performance curves.

☐ Reversed operation
All models are reversible when wired to a reversing switch. For reverse air flow direction allow a loss in performance of approx. 1/3.

☐ Installation
Installation in any position. Ensure that the motor drainage holes face downwards.

☐ Dimensions
Pole-switch and explosion proof models may deviate from the information above.

☐ Sound levels
See characteristic curve. The sound power and sound pressure are specified at 4 m distances under free field conditions, for average operating point suction/pressure side. See page 10 on for sound emission and acoustics. Deviation for ex-models.

R.P.M.	Air flow volume (FID)	Motor power	Current* standard-supply	Current* max. controlled	Wiring diagram	max. air flow temp. standard supply	max. air flow temp. speed controlled	Weight net	Model HQ incl. guard	Ref. no.	Model HW incl. guard	Ref. no.	Model HS incl. guard	Ref. no.	Model HRF	Ref. no.
min^{-1}	V̇ m³/h	W	A	A	No.	+°C	+°C	kg								
1 Phase motor, 230 Volt / 50 Hz, capacitor motor, protection to IP 55																
920	1330	33	0.25	0.35	317[1)]	60	40	9.0	**HQW 315/6**	1105	—	—	**HSW 315/6**	0142	**HRFW 315/6**[1)]	0202
1390	2080	104	0.45	0.47	475[2)]	60	40	8.0	**HQW 315/4**	1106	**HWW 315/4**	1004	**HSW 315/4**	0143	**HRFW 315/4**[2)]	0203
3 Phase motor, 400 Volt / 50 Hz, squirrel cage motor protection to IP 55																
950	1370	68	0.27	0.32	469	60	40	9.0	**HQD 315/6**	1117	—	—	—	—	—	—
1330	1960	84	0.24	0.26	469	60	40	9.0	**HQD 315/4**	1118	**HWD 315/4**	1019	**HSD 315/4**	0158	**HRFD 315/4**	0223
2760	4080	527	1.10	1.23	469	50	40	11.0	**HQD 315/2**	1119	**HWD 315/2**	1020	—	—	**HRFD 315/2**	0224
Two-speed, 3 ph., 400 V, 50 Hz, Y/△ switch, protection to IP 55																
1040/1280	1530/1980	56/87	0.11/0.22		520	60	—	10.5	**HQD 315/4/4**	1460	—	—	—	—	**HRFD 315/4/4**	1462
2 speed motor, pole-switching, Dahlander windings, 400 Volt, 50 Hz, protection to IP 55																
720/1445	980/2060	49/115	0.20/0.43		472	60	—	12.0	**HQD 315/8/4**	1129	—	—	**HSD 315/8/4**	0346	**HRFD 315/8/4**	0391
1445/2845	2100/4190	106/558	0.45/1.32		472	50	—	12.5	**HQD 315/4/2**	1131	—	—	**HSD 315/4/2**	0348	**HRFD 315/4/2**	0393
Explosion proof Ex d II B, 1 ph., 230 Volt, 50 Hz, protection to IP 55, temp. class T1-T3																
1370	2070	180*	1.25*		757	40	—	13.0	**HQW 315/4 Ex**	0442	—	—	—	—	**HRFW 315/4 Ex**	0439
Explosion proof Ex e II, 3 ph., 400 Volt, 50 Hz, protection to IP 55, temp. class T1-T3																
920	1400	250*	0.97*		470	40	—	23.0	**HQD 315/6 Ex**	1098	—	—	—	—	—	—
1350	2140	120*	0.37*		470	40	—	14.0	**HQD 315/4 Ex**	1147	—	—	—	—	**HRFD 315/4 Ex**	0473
2770	4130	550*	1.43*		470	40	—	16.5	**HQD 315/2 Ex**	1148	—	—	—	—	**HRFD 315/2 Ex**	0474

* Motor nominal values, Ex see info page 16. [1)] Type HRFW../6: connect using wiring diagram no. SS-963. [2)] Type HRFW../4: connect using wiring diagram no. SS-965. [3)] Incl. full motor protection.

315/2

Frequency		Hz	Total	125	250	500	1k	2k	4k	8k
L_{WA}	Air noise	dB(A)	89	61	71	87	81	81	75	65
$L_{PA,4m}$	Air noise	dB(A)	69	41	51	67	61	61	55	45

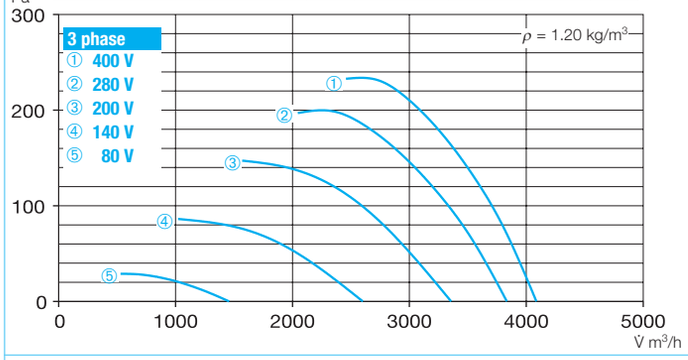

315/4

Frequency		Hz	Total	125	250	500	1k	2k	4k	8k
L_{WA}	Air noise	dB(A)	70	56	60	67	63	61	56	47
$L_{PA,4m}$	Air noise	dB(A)	50	36	40	47	43	41	36	27

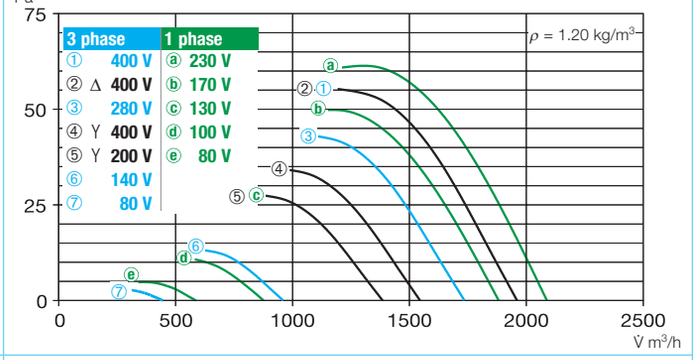

315/6

Frequency		Hz	Total	125	250	500	1k	2k	4k	8k
L_{WA}	Air noise	dB(A)	59	46	53	53	53	49	43	36
$L_{PA,4m}$	Air noise	dB(A)	39	26	33	33	33	29	23	16

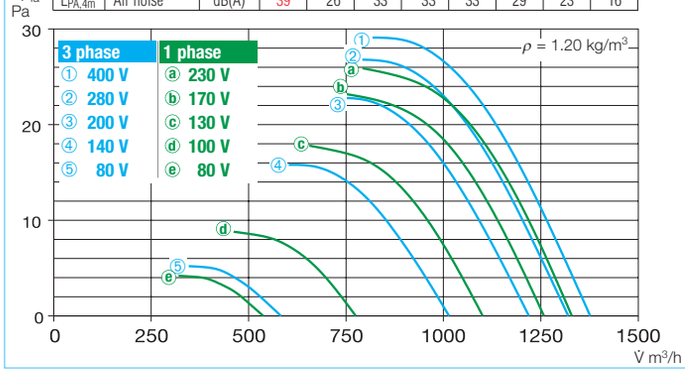

315/8

Frequency		Hz	Total	125	250	500	1k	2k	4k	8k
L_{WA}	Air noise	dB(A)	49	35	45	43	43	38	32	28
$L_{PA,4m}$	Air noise	dB(A)	29	15	25	23	23	18	12	8

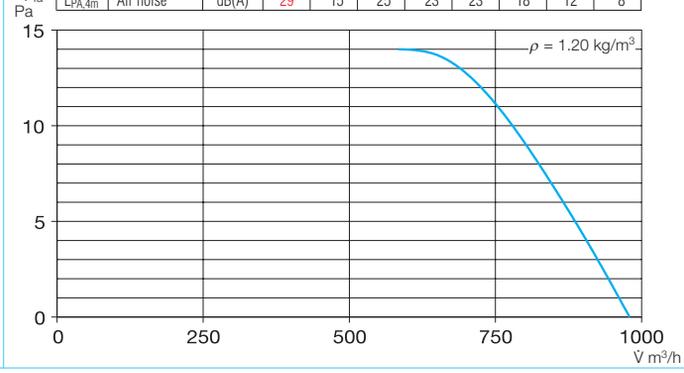

Accessories for HRF Description see page 230 on

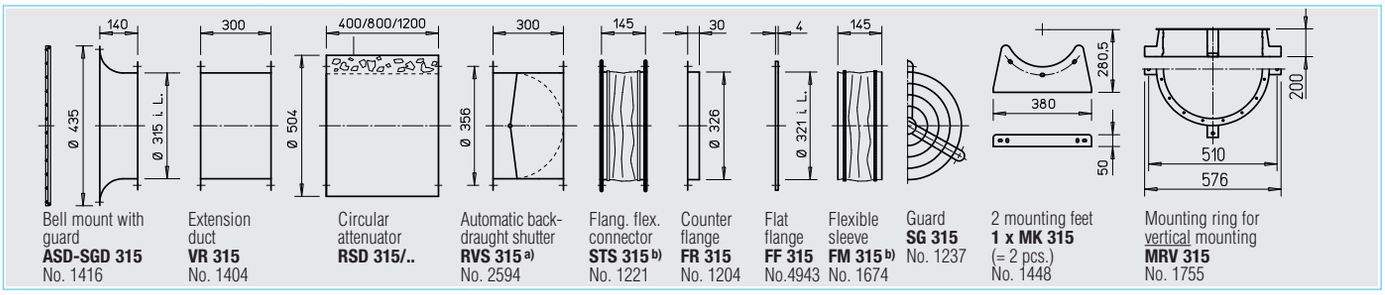

Bell mount with guard **ASD-SGD 315** No. 1416

Extension duct **VR 315** No. 1404

Circular attenuator **RSD 315/..**

Automatic back-draught shutter **RVS 315** a) No. 2594

Flang. flex. connector **STS 315** b) No. 1221

Counter flange **FR 315** No. 1204

Flat flange **FF 315** No.4943

Flexible sleeve **FM 315** b) No. 1674

Guard **SG 315** No. 1237

2 mounting feet **1 x MK 315** (= 2 pcs.) No. 1448

Mounting ring for vertical mounting **MRV 315** No. 1755

a) For motorised shutters see accessory page

b) Models for ex-proof fans see below

Frequency inverter with integrated Sine filter		Transformer controller 5-speed Pole switch		Electronic controller, stepless flush/surf.		Full motor protection for connection of integrated thermal contacts		Reversing switch	
Model	Ref. no.	**Model**	Ref. no.	**Model**	Ref. no.	**Model**	Ref. no.	**Model**	Ref. no.
—	—	**TSW 0,3**	3608	**ESU 1/ESA 1**	0236/0238	—	—	**WS**	1271
—	—	**MWS 1,5**[3]	1947	**ESU 1/ESA 1**	0236/0238	**MW**	1579	**WS**	1271
FU-BS 2,5[3]	5459	**RDS 1**[3]	1314	—	—	**MD**	5849	**WS**	1271
FU-BS 2,5[3]	5459	**RDS 1**[3]	1314	—	—	**MD**	5849	**WS**	1271
FU-BS 2,5[3]	5459	**RDS 2**[3]	1315	**ESD 5**	0501	**MD**	5849	**WS**	1271
		Speed switch							
FU-BS 2,5[3]	5459	**DS2**	1351	—	—	**M 4**[4]**/MD**	1571/5849	**WS**	1271
		Pole switch							
—	—	**PDA 12**[5]	5081	—	—	**M 3**[4]	1293	**PWDA**	1282
—	—	**PDA 12**[5]	5081	—	—	**M 3**[4]	1293	**PWDA**	1282
—	—	not permitted		not permitted		—	—	—	—
—	—	not permitted		not permitted		—	—	—	—
—	—	not permitted		not permitted		—	—	—	—
—	—	not permitted		not permitted		—	—	—	—

4) Incl. pole switch.

5) See switch product page for flush mounted version.

Other accessories Page

b) **Accessories for explosion proof fans**

Flanged flexible connector
Type STS 315 Ex Ref. no. 2503
Flexible sleeve
Type FM 315 Ex Ref. no. 1690

Extension tube for HS
Type VH 315 Ref. no. 1344
Cylindrical duct, galvanised steel, length: 150 mm.

Attenuators 421 on
Shutters and grilles 487 on
Speed controllers and switches 525 on

HQ

HW

HRF

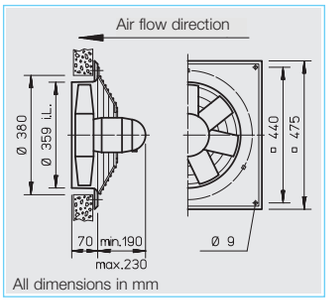

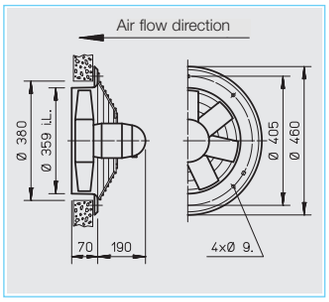

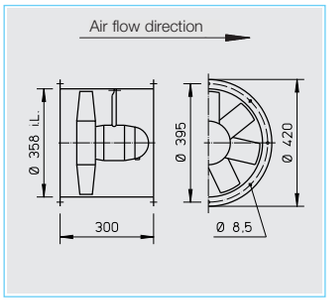

■ Specification for all models

☐ Casing
Manufactured in galvanised sheet steel. Model HQ and HW have an additional two-layer finishing in papyrus white. Ex-models without paint.

☐ Impeller
Highly efficient, profiled blade impeller, dynamically balanced and manufactured from impact resistant polymers. Suitable for –30 to +60 °C. Deviation for ex-models.

☐ Motor
Totally enclosed motor with a die-cast aluminium casing, protected to IP 55. Ball bearing mounted. Maintenance-free and interference-free. Humidity protection of windings. For maximum air flow temp. see table below. Deviation for ex-models.

☐ Motor protection
All models (3~ explosion proof excluded) have thermal contacts as standard which must be connected to a motor protection unit (see below). 1 ph. ex-proof fans have automatic resetting thermal contacts wired in series with the motor windings.

☐ Electrical connection
Terminal box (IP 55) mounted on rear of motor as standard. Also on outside of piping for HRF. Deviation for ex-models.

☐ Guard
Powder-coated steel wire for HQ and HW (HQ ex-models galvanised) according to DIN EN ISO 13857.

☐ Speed control
For all speed controllable models the current are identified with a value in the "speed controlled" column of the table below which must be used when selecting a controller. Possible allocations of frequency inverters are specified in the table below. The planned use of a frequency inverter without Sine filter must be stated when ordering. This requires a change of fan design and potential additional costs.
The air flow rates are shown in the performance curves.

☐ Reversed operation
All models are reversible when wired to a reversing switch. For reverse air flow direction allow a loss in performance of approx. 1/3.

☐ Installation
Installation in any position. Ensure that the motor drainage holes face downwards.

☐ Dimensions
Pole-switch and explosion proof models may deviate from the information above.

☐ Sound levels
See characteristic curve. The sound power and sound pressure are specified at 4 m distances under free field conditions, for average operating point suction/pressure side. See page 10 on for sound emission and acoustics. Deviation for ex-models.

R.P.M.	Air flow volume (FID)	Motor power	Current* standard-supply	Current* max. controlled	Wiring diagram	max. air flow temp. standard supply	max. air flow temp. speed controlled	Weight net	Model HQ incl. guard	Ref. no.	Model HW incl. guard	Ref. no.	Model HRF	Ref. no.
min^{-1}	V̇ m³/h	W	A	A	No.	+°C	+°C	kg						
1 Phase motor, 230 Volt / 50 Hz, capacitor motor, protection to IP 55														
960	1940	75	0.47	0.47	475[1]	60	40	12	**HQW 355/6**	1107	—	—	**HRFW 355/6**[1]	0204
1345	2850	130	0.60	0.65	475[1]	60	40	11	**HQW 355/4**	1108	**HWW 355/4**	1006	**HRFW 355/4**[1]	0205
3 Phase motor, 400 Volt / 50 Hz, squirrel cage motor protection to IP 55														
960	1970	70	0.27	0.29	469	60	40	9.5	**HQD 355/6**	1120	—	—	—	—
1375	2900	130	0.35	0.35	469	60	40	11.0	**HQD 355/4**	1121	**HWD 355/4**	1022	**HRFD 355/4**	0226
2670	5710	825	1.60	1.60	469	60	40	15.0	**HQD 355/2**	1122	**HWD 355/2**	1023	**HRFD 355/2**	0227
Two-speed, 3 ph., 400 V, 50 Hz, Y/△ switch, protection to IP 55														
1120/1350	2460/2860	90/132	0.17/0.32		520	60	—	11.0	**HQD 355/4/4**	1463	—	—	**HRFD 355/4/4**	1464
2 speed motor, pole-switching, Dahlander windings, 400 Volt, 50 Hz, protection to IP 55														
700/1395	1430/2920	45/145	0.14/0.35		472	60	—	11.0	**HQD 355/8/4**	1132	—	—	**HRFD 355/8/4**	0394
1430/2840	3050/6150	250/950*	0.63/2.30*		472	40	—	16.0	**HQD 355/4/2**	1134	—	—	**HRFD 355/4/2**	0396
Explosion proof Ex d II B, 1 ph., 230 Volt, 50 Hz, protection to IP 55, temp. class T1-T3														
1370	2940	180*	1.25*		757	40	—	18.0	**HQW 355/4 Ex**	0444	—	—	**HRFW 355/4 Ex**	0443
Explosion proof Ex e II, 3 ph., 400 Volt, 50 Hz, protection to IP 55, temp. class T1-T3														
920	2010	250*	0.97*		470	40	—	25.0	**HQD 355/6 Ex**	1101	—	—	—	—
1350	3060	120*	0.37*		470	40	—	18.0	**HQD 355/4 Ex**	1150	—	—	**HRFD 355/4 Ex**	0476
2830	5910	1100*	2.60*		470	40	—	12.5	**HQD 355/2 Ex**	1261	—	—	**HRFD 355/2 Ex**	0136

* Motor nominal values, Ex see info page 16. [1] Type HRFW: connect using wiring diagram no. SS-965. [2] Incl. full motor protection. [3] Incl. pole switch.

355/2

Frequency		Hz	Total	125	250	500	1k	2k	4k	8k
L_{WA}	Air noise	dB(A)	91	59	73	88	83	85	78	67
$L_{PA,4m}$	Air noise	dB(A)	71	39	53	68	63	65	58	47

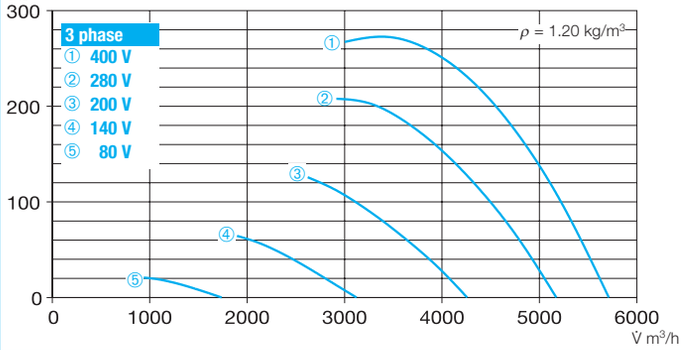

355/4

Frequency		Hz	Total	125	250	500	1k	2k	4k	8k
L_{WA}	Air noise	dB(A)	71	49	64	65	64	64	57	45
$L_{PA,4m}$	Air noise	dB(A)	51	29	44	45	44	44	37	25

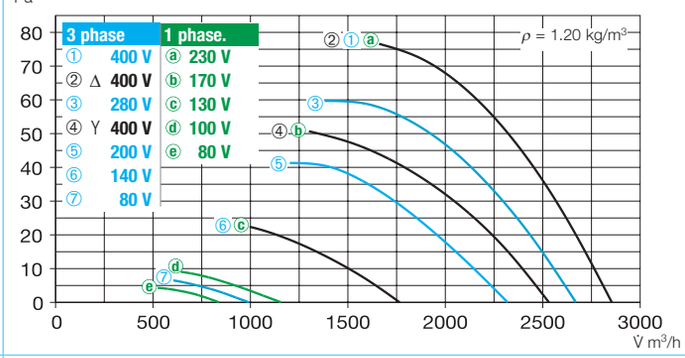

355/6

Frequency		Hz	Total	125	250	500	1k	2k	4k	8k
L_{WA}	Air noise	dB(A)	62	50	57	56	56	53	47	40
$L_{PA,4m}$	Air noise	dB(A)	42	30	37	36	36	33	27	20

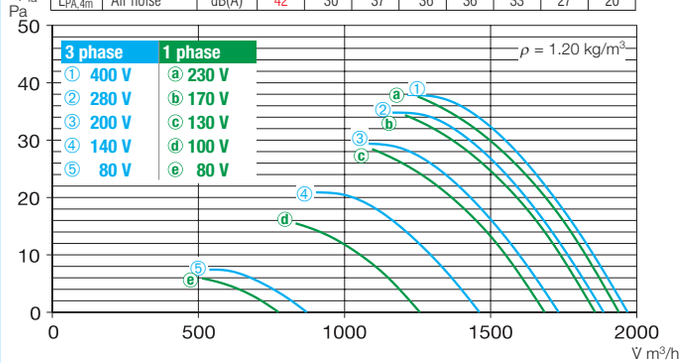

355/8

Frequency		Hz	Total	125	250	500	1k	2k	4k	8k
L_{WA}	Air noise	dB(A)	71	50	63	66	65	65	58	46
$L_{PA,4m}$	Air noise	dB(A)	51	30	43	46	45	45	38	26

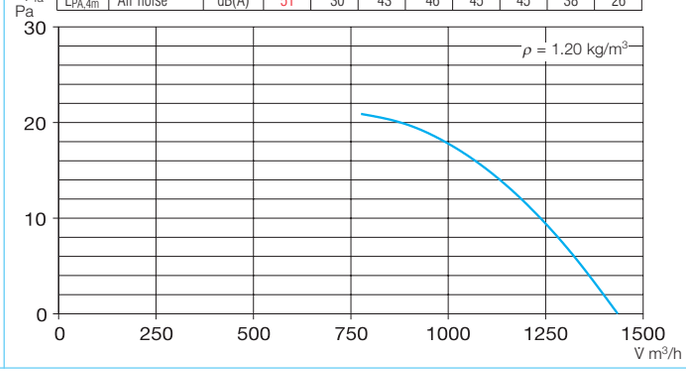

Accessories for HRF Description see page 230 on

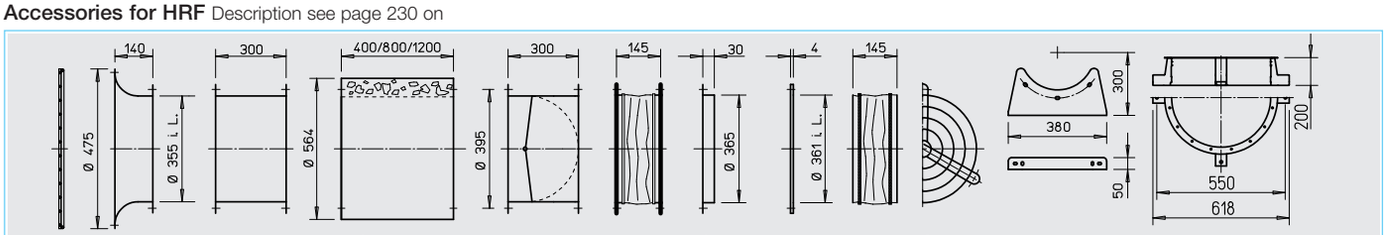

Bell mount with guard	Extension duct	Circular attenuator	Automatic back-draught shutter	Flang. flex. connector	Counter flange	Flat flange	Flexible sleeve	Guard	2 mounting feet	Mounting ring for vertical mounting
ASD-SGD 355	**VR 355**	**RSD 355/..**	**RVS 355** a)	**STS 355** b)	**FR 355**	**FF 355**	**FM 355** b)	**SG 355**	**1 x MK 355**	**MRV 355**
No. 1417	No. 1405		No. 2595	No. 1222	No. 1205	No.4944	No. 1675	No. 1238	(= 2 pcs.) No. 1448	No. 1759

a) For motorised shutters see accessory page

b) Models for ex-proof fans see below

Frequency inverter with integrated Sine filter		Transformer controller 5-speed Pole switch		Electronic controller, stepless flush/surf.		Full motor protection for connection of integrated thermal contacts		Reversing switch	
Model	Ref. no.	**Model**	Ref. no.	**Model**	Ref. no.	**Model**	Ref. no.	**Model**	Ref. no.
—	—	**MWS 1,5** 2)	1947	**ESU 1/ESA 1**	0236/0238	**MW**	1579	**WS**	1271
—	—	**MWS 1,5** 2)	1947	**ESU 1/ESA 1**	0236/0238	**MW**	1579	**WS**	1271
FU-BS 2,5 2)	5459	**RDS 1** 2)	1314	—	—	**MD**	5849	**WS**	1271
FU-BS 2,5 2)	5459	**RDS 1** 2)	1314	—	—	**MD**	5849	**WS**	1271
FU-BS 2,5 2)	5459	**RDS 2** 2)	1315	**ESD 5**	0501	**MD**	5849	**WS**	1271
		Speed switch							
—	—	**DS 2**	1351	—	—	**M 4** 3)**/MD**	1571/5849	**WS**	1271
		Pole switch							
—	—	**PDA 12** 4)	5081	—	—	**M 3** 3)	1293	**PWDA**	1282
—	—	**PDA 12** 4)	5081	—	—	**MSA**	1289	**PWDA**	1282
—	—	not permitted		not permitted		—	—	—	—
—	—	not permitted		not permitted		—	—	—	—
—	—	not permitted		not permitted		—	—	—	—
—	—	not permitted		not permitted		—	—	—	—

4) See switch product page for flush mounted version.

Other accessories **Page**

b) **Accessories for explosion proof fans**

Flanged flexible connector
Type STS 355 Ex Ref. no. 2504

Flexible sleeve
Type FM 355 Ex Ref. no. 1691

Extension tube for HS
Type VH 355 Ref. no. 1345
Cylindrical duct, galvanised steel, length: 150 mm.

Attenuators 421 on
Shutters and grilles 487 on
Speed controllers and switches 525 on

HQ

HW

HRF

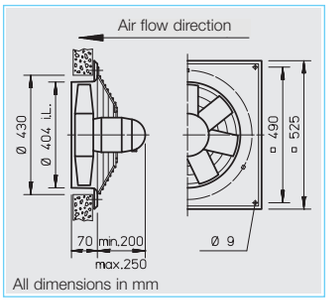

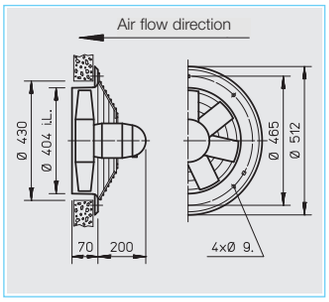

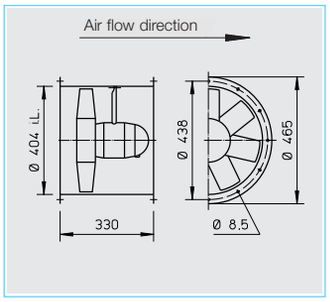

■ Specification for all models

☐ Casing
Manufactured in galvanised sheet steel. Model HQ and HW have an additional two-layer finishing in papyrus white. Ex-models without paint.

☐ Impeller
Highly efficient, profiled blade impeller, dynamically balanced and manufactured from impact resistant polymers. Suitable for –30 to +60 °C. Deviation for ex-models.

☐ Motor
Totally enclosed motor with a die-cast aluminium casing, protected to IP 55. Ball bearing mounted. Maintenance-free and interference-free. Humidity protection of windings. For maximum air flow temp. see table below. Deviation for ex-models.

☐ Motor protection
All models (explosion proof excluded) have thermal contacts as standard which must be connected to a motor protection unit (see below).

☐ Electrical connection
Terminal box (IP 55) mounted on rear of motor as standard. Also on outside of piping for HRF. Deviation for ex-models.

☐ Guard
Powder-coated steel wire for HQ and HW (HQ ex-models galvanised) according to DIN EN ISO 13857

☐ Speed control
For all speed controllable models the current are identified with a value in the "speed controlled" column of the table below which must be used when selecting a controller. Possible allocations of frequency inverters are specified in the table below. The planned use of a frequency inverter without Sine filter must be stated when ordering. This requires a change of fan design and potential additional costs.
The air flow rates are shown in the performance curves.

☐ Reversed operation
All models are reversible when wired to a reversing switch. For reverse air flow direction allow a loss in performance of approx. 1/3.

☐ Installation
Installation in any position. Ensure that the motor drainage holes face downwards.

☐ Dimensions
Pole-switch and explosion proof models may deviate from the information above.

☐ Sound levels
See characteristic curve. The sound power and sound pressure are specified at 4 m distances under free field conditions, for average operating point suction/pressure side. See page 10 on for sound emission and acoustics. Deviation for ex-models.

☐ Information	Page
Techn. description	140
Selection chart	141
Information for planning	10 on

Made to order designs
Alternative voltages, protection classes, air flow direction, air flow temperature, acid protection and cast aluminium impellers are available on request.

Note the technical information on page 15 on.

R.P.M.	Air flow volume (FID)	Motor power	Current* standard-supply	Current* max. controlled	Wiring diagram	max. air flow temp. standard supply	max. air flow temp. speed controlled	Weight net	Model HQ incl. guard	Ref. no.	Model HW incl. guard	Ref. no.	Model HRF	Ref. no.
min⁻¹	V m³/h	W	A	A	No.	+°C	+°C	kg						
1 Phase motor, 230 Volt / 50 Hz, capacitor motor, protection to IP 55														
930	2570	77	0.52	0.54	475[1)]	60	40	13.0	**HQW 400/6**	1110	—	—	**HRFW 400/6**[1)]	0206
1350	4010	235	1.00	1.10	475[1)]	60	40	14.0	**HQW 400/4**	1111	**HWW 400/4**	1008	**HRFW 400/4**[1)]	0207
3 Phase motor, 400 Volt / 50 Hz, squirrel cage motor protection to IP 55														
950	2620	89	0.28	0.30	469	60	40	13.0	**HQD 400/6**	1123	—	—	—	—
1330	3960	200	0.40	0.40	469	60	40	14.0	**HQD 400/4**	1124	**HWD 400/4**	1025	**HRFD 400/4**	0229
Two-speed, 3 ph., 400 V, 50 Hz, Y/△ switch, protection to IP 55														
1325/1085	3170/3920	135/205	0.25/0.45	0.45	520	60	40	20.0	**HQD 400/4/4**	1465	—	—	**HRFD 400/4/4**	1466
2890/2600	7890/8400	1300/2310*	3.00/5.60*	4.70	520	40	40	25.0	**HQD 400/2/2**	1475	—	—	**HRFD 400/2/2**	1474
2 speed motor, pole-switching, Dahlander windings, 400 Volt, 50 Hz, protection to IP 55														
690/1390	2010/4100	70/250	0.25/0.60	—	472	60	—	13.0	**HQD 400/8/4**	1137	—	—	**HRFD 400/8/4**	0399
1480/2940	4180/8540	300/2310*	1.00/5.20*	—	472	40	—	24.0	**HQD 400/4/2**	1139	—	—	**HRFD 400/4/2**	0401
Explosion proof Ex e II, 3 ph., 400 Volt, 50 Hz, protection to IP 55, temp. class T1-T3														
920	2870	250*	0.97*	—	470	40	—	13.0	**HQD 400/6 Ex**	1109	—	—	—	—
1370	4380	370*	1.08*	—	470	40	—	16.0	**HQD 400/4 Ex**	1153	—	—	**HRFD 400/4 Ex**	0479

* Motor nominal values, Ex see info page 16. 1) Type HRFW: connect using wiring diagram no. SS-965. 2) Incl. full motor protection. 3) Incl. pole switch.

400/2

Frequency		Hz	Total	125	250	500	1k	2k	4k	8k
L_{WA}	Air noise	dB(A)	91	58	72	85	86	86	79	69
$L_{PA,4m}$	Air noise	dB(A)	71	38	52	65	66	66	59	49

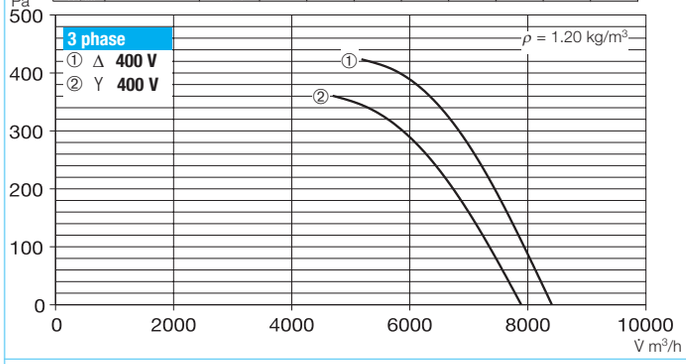

400/4

Frequency		Hz	Total	125	250	500	1k	2k	4k	8k
L_{WA}	Air noise	dB(A)	76	54	72	71	68	68	61	50
$L_{PA,4m}$	Air noise	dB(A)	56	34	52	51	48	48	41	30

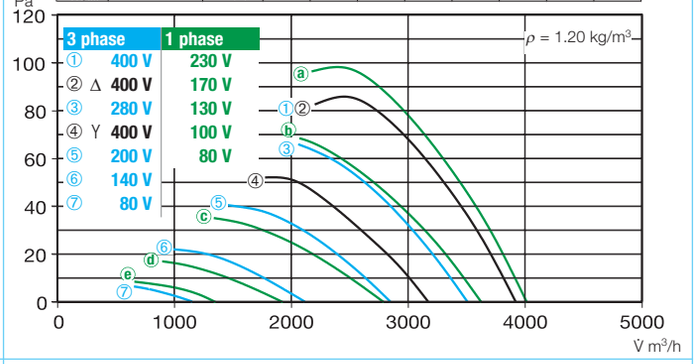

400/6

Frequency		Hz	Total	125	250	500	1k	2k	4k	8k
L_{WA}	Air noise	dB(A)	66	53	60	60	59	56	50	43
$L_{PA,4m}$	Air noise	dB(A)	46	33	40	40	39	36	30	23

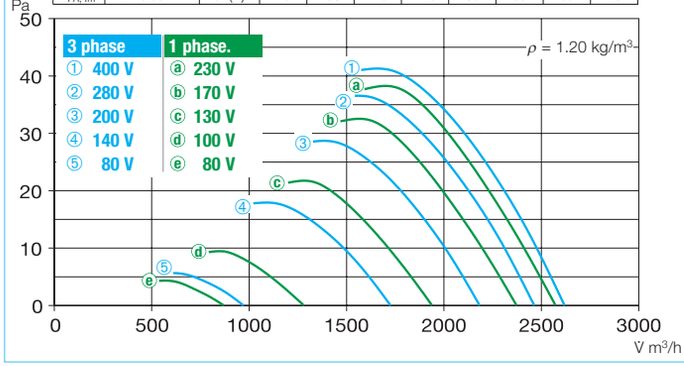

400/8

Frequency		Hz	Total	125	250	500	1k	2k	4k	8k
L_{WA}	Air noise	dB(A)	55	42	46	48	50	48	42	35
$L_{PA,4m}$	Air noise	dB(A)	35	22	26	28	30	28	22	15

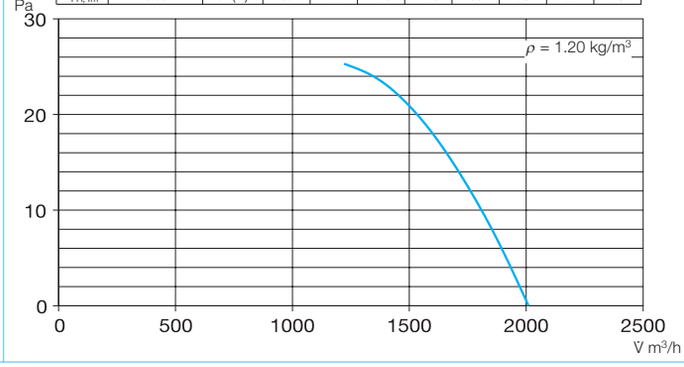

Accessories for HRF Description see page 230 on

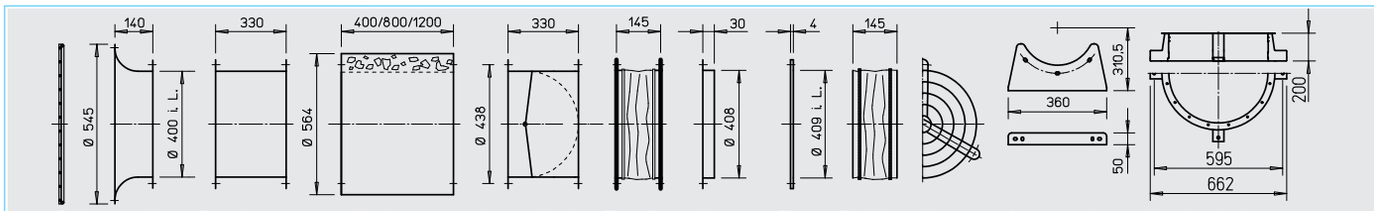

Bell mount with guard **ASD-SGD 400** No. 1418

Extension duct **VR 400** No. 1406

Circular attenuator **RSD 400/..**

Automatic back-draught shutter **RVS 400** a) No. 2596

Flang. flex. connector **STS 400** b) No. 1223

Counter flange **FR 400** No. 1206

Flat flange **FF 400** No.4945

Flexible sleeve **FM 400** b) No. 1676

Guard **SG 400** No. 1239

2 mounting feet **1 x MK 400** (= 2 pcs.) No. 1449

Mounting ring for vertical mounting **MRV 400** No. 1760

a) For motorised shutters see accessory page

b) Models for ex-proof fans see below

	Frequency inverter with integrated Sine filter		Transformer controller 5-speed Pole switch		Electronic controller, stepless flush/surf.		Full motor protection for connection of integrated thermal contacts		Reversing switch	
	Model	Ref. no.	**Model**	Ref. no.	**Model**	Ref. no.	**Model**	Ref. no.	**Model**	Ref. no.
	—	—	**MWS 1,5**[2]	1947	**ESU 1/ESA 1**	0236/0238	**MW**	1579	**WS**	1271
	—	—	**MWS 1,5**[2]	1947	**ESU 3/ESA 3**	0237/0239	**MW**	1579	**WS**	1271
	FU-BS 2,5[2]	5459	**RDS 1**[2]	1314	—	—	**MD**	5849	**WS**	1271
	FU-BS 2,5[2]	5459	**RDS 1**[2]	1314	—	—	**MD**	5849	**WS**	1271
			Speed switch							
	FU-BS 2,5[2]	5459	**RDS 1**[2]	1314	—	—	**M 4**[4]**/MD**	1571/5849	**WS**	1271
	FU-BS 5[2]	5460	**DS 2**	1351	**ESD 5**[2]	0501	**M 4**[4]**/MD**	1571/5849	**WS**	1271
			Pole switch							
	—	—	**PDA 12**[4]	5081	—	—	**M 3**[3]	1293	**PWDA**	1282
	—	—	**PDA 12**[4]	5081	—	—	**M 3**[3]	1293	**PWDA**	1282
	—	—	not permitted		not permitted		—	—	—	—
	—	—	not permitted		not permitted		—	—	—	—

4) see switch product page for flush mounted version.

Other accessories **Page**

b) **Accessories for explosion proof fans**
Flanged flexible connector
Type STS 400 Ex Ref. no. 2505
Flexible sleeve
Type FM 400 Ex Ref. no. 1692

Extension tube for HS
Type VH 400 Ref. no. 1346
Cylindrical duct, galvanised steel, length: 150 mm.

Attenuators 421 on
Shutters and grilles 487 on
Speed controllers and switches 525 on

HQ

HW

HRF

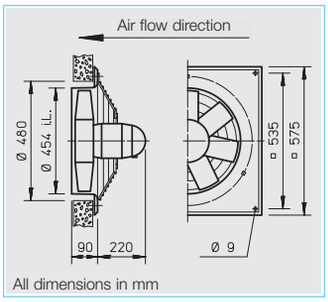

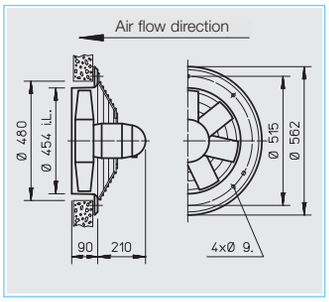

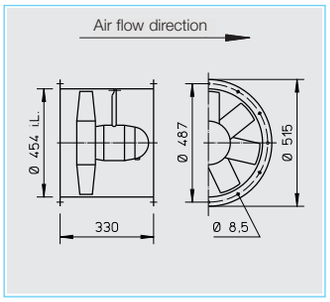

■ Specification for all models

□ Casing
Manufactured in galvanised sheet steel. Model HQ and HW have an additional two-layer finishing in papyrus white. Ex-models without paint.

□ Impeller
Highly efficient, profiled blade impeller, dynamically balanced and manufactured from impact resistant polymers. Suitable for –30 to +60 °C. Deviation for ex-models.

□ Motor
Totally enclosed motor with a die-cast aluminium casing, protected to IP 55. Ball bearing mounted. Maintenance-free and interference-free. Humidity protection of windings. For maximum air flow temp. see table below. Deviation for ex-models.

□ Motor protection
All models (explosion proof excluded) have thermal contacts as standard which must be connected to a motor protection unit (see below).

□ Electrical connection
Terminal box (IP 55) mounted on rear of motor as standard. Also on outside of piping for HRF. Deviation for ex-models.

□ Guard
Powder-coated steel wire for HQ and HW (HQ ex-models galvanised) according to DIN EN ISO 13857.

□ Speed control
For all speed controllable models the current are identified with a value in the "speed controlled" column of the table below which must be used when selecting a controller. Possible allocations of frequency inverters are specified in the table below. The planned use of a frequency inverter without Sine filter must be stated when ordering. This requires a change of fan design and potential additional costs.
The air flow rates are shown in the performance curves.

□ Reversed operation
All models are reversible when wired to a reversing switch. For reverse air flow direction allow a loss in performance of approx. 1/3.

□ Installation
Installation in any position. Ensure that the motor drainage holes face downwards.

□ Dimensions
Pole-switch and explosion proof models may deviate from the information above.

□ Sound levels
See characteristic curve. The sound power and sound pressure are specified at 4 m distances under free field conditions, for average operating point suction/pressure side. See page 10 on for sound emission and acoustics. Deviation for ex-models.

R.P.M.	Air flow volume (FID)	Motor power	Current* standard-supply	Current* max. controlled	Wiring diagram	max. air flow temp. standard supply	max. air flow temp. speed controlled	Weight net	Model HQ incl. guard	Ref. no.	Model HW incl. guard	Ref. no.	Model HRF	Ref. no.
min⁻¹	V m³/h	W	A	A	No.	+°C	+°C	kg						
1 Phase motor, 230 Volt / 50 Hz, capacitor motor, protection to IP 55														
915	3890	136	0.63	0.63	475[1)]	60	40	19.0	**HQW 450/6**	0991	—	—	**HRFW 450/6**[1)]	0208
1380	5770	405	1.76	2.02	475[1)]	60	40	18.0	**HQW 450/4**	0992	**HWW 450/4**	1010	**HRFW 450/4**[1)]	0209
3 Phase motor, 400 Volt / 50 Hz, squirrel cage motor protection to IP 55														
960	3920	137	0.38	0.42	469	60	40	18.0	**HQD 450/6**	0993	—	—	**HRFD 450/6**	0230
1390	5810	384	0.81	0.92	469	50	40	17.0	**HQD 450/4**	0994	**HWD 450/4**	1028	**HRFD 450/4**	0231
Two-speed, 3 ph., 400 V, 50 Hz, Y/△ switch, protection to IP 55														
1130/1390	5090/5780	280/378	0.51/0.82	—	520	60	—	22.0	**HQD 450/4/4**	1467	—	—	**HRFD 450/4/4**	1468
2775/2200	10190/9335	1300/2310*	5.40/3.0*	5,10	520	40	40	32.0	—	—	—	—	**HRFD 450/2/2**	0484
2 speed motor, pole-switching, Dahlander windings, 400 Volt, 50 Hz, protection to IP 55														
480/970	1930/3950	62/163	0.22/0.47	—	472	60	—	18.0	**HQD 450/12/6**	0995	—	—	—	—
705/1410	2860/5810	91/404	0.36/0.92	—	472	50	—	20.0	**HQD 450/8/4**	0996	—	—	**HRFD 450/8/4**	0403
Explosion proof Ex e II, 3 ph., 400 Volt, 50 Hz, protection to IP 55, temp. class T1-T3														
920	4090	250*	0.97*	—	470	40	—	15.5	**HQD 450/6 Ex**	1473	—	—	—	—
1370	6240	370*	1.08*	—	470	40	—	15.5	**HQD 450/4 Ex**	1154	—	—	**HRFD 450/4 Ex**	0481

* Motor nominal values, Ex see info page 16. 1) Type HRFW: connect using wiring diagram no. SS-965. 2) Incl. full motor protection. 3) see switch product page for flush mounted version.

450/2

Frequency		Hz	Total	125	250	500	1k	2k	4k	8k
L_{WA}	Air noise	dB(A)	98	72	89	91	96	90	87	79
$L_{PA,4m}$	Air noise	dB(A)	78	52	69	71	76	70	67	59

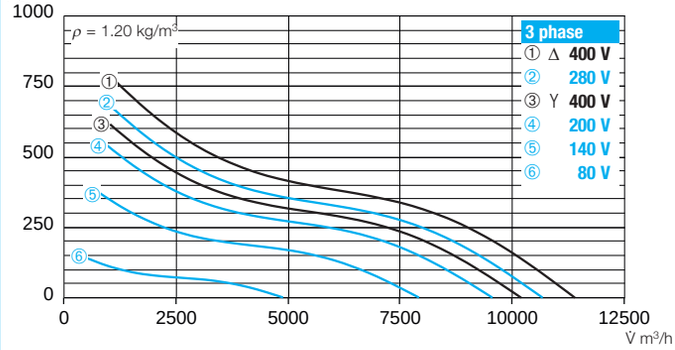

450/4

Frequency		Hz	Total	125	250	500	1k	2k	4k	8k
L_{WA}	Air noise	dB(A)	78	52	69	72	73	72	67	60
$L_{PA,4m}$	Air noise	dB(A)	58	32	49	52	53	52	47	40

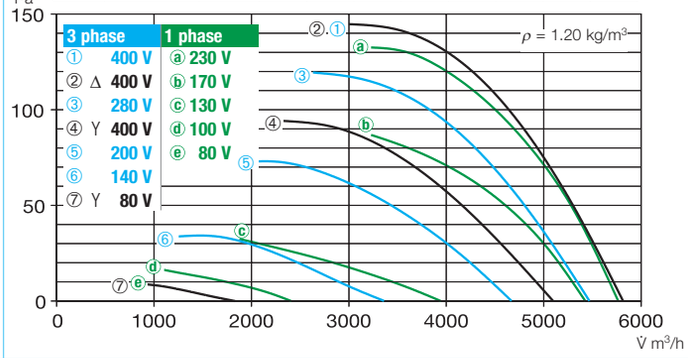

450/6

Frequency		Hz	Total	125	250	500	1k	2k	4k	8k
L_{WA}	Air noise	dB(A)	68	52	58	62	63	61	56	47
$L_{PA,4m}$	Air noise	dB(A)	48	32	38	42	43	41	36	27

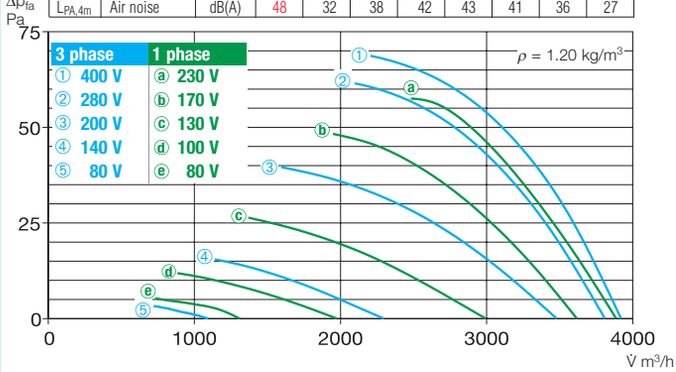

450/8

Frequency		Hz	Total	125	250	500	1k	2k	4k	8k
L_{WA}	Air noise	dB(A)	78	52	69	73	73	72	67	60
$L_{PA,4m}$	Air noise	dB(A)	58	32	49	53	53	52	47	40

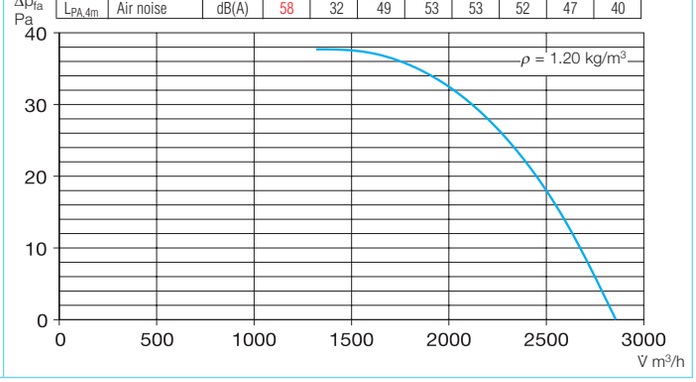

Accessories for HRF Description see page 230 on

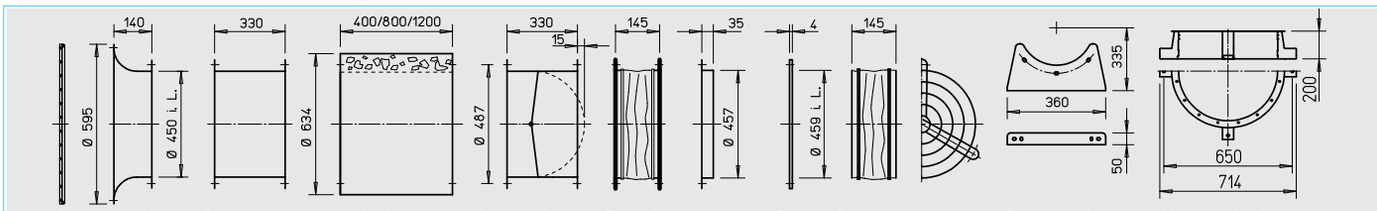

Bell mount with guard **ASD-SGD 450** No. 1419

Extension duct **VR 450** No. 1407

Circular attenuator **RSD 450/..**

Automatic back-draught shutter **RVS 450** a) No. 2597

Flang. flex. connector **STS 450** b) No. 1224

Counter flange **FR 450** No. 1207

Flat flange **FF 450** No.4946

Flexible sleeve **FM 450** b) No. 1677

Guard **SG 450** No. 1240

2 mounting feet **1 x MK 450** (= 2 pcs) No. 1449

Mounting ring for vertical mounting **MRV 450** No. 1761

a) For motorised shutters see accessory page

b) Models for ex-proof fans see below

Frequency inverter with integrated Sine filter		Transformer controller 5-speed Pole switch		Electronic controller, stepless flush/surf.		Full motor protection for connection of inte-grated thermal contacts		Reversing switch	
Model	Ref. no.	**Model**	Ref. no.	**Model**	Ref. no.	**Model**	Ref. no.	**Model**	Ref. no.
—	—	**MWS 1,5** 2)	1947	**ESU 3/ESA 3**	0237/0239	**MW**	1579	**WS**	1271
—	—	**MWS 3** 2)	1948	**ESU 3/ESA 3**	0237/0239	**MW**	1579	**WS**	1271
FU-BS 2,5 2)	5459	**RDS 1** 2)	1314	—	—	**MD**	5849	**WS**	1271
FU-BS 2,5 2)	5459	**RDS 2** 2)	1315	**ESD 5** 2)	0501	**MD**	5849	**WS**	1271
		Speed switch							
FU-BS 2,5 2)	5459	**DS 2** 5)	1351	—	—	**M 4** 4)**/MD**	1571/5849	**WS**	1271
FU-BS 8,0 2)	5461	**RDS 7** 2)	1578	**ESD 11,5** 2)	0502	**M 4** 4)**/MD**	1571/5849	**WS**	1271
		Pole switch							
—	—	**PDA 12** 3)	5081	—	—	**M 3** 4)	1293	**PWDA**	1282
—	—	**PDA 12** 3)	5081	—	—	**M 3** 4)	1293	**PWDA**	1282
—	—	not permitted		not permitted		—	—	—	—
—	—	not permitted		not permitted		—	—	—	—

4) Incl. pole switch.

5) Speed switch.

Other accessories	Page
b) **Accessories for explosion proof fans**	
Flanged flexible connector	
Type STS 450 Ex Ref. no. 2506	
Flexible sleeve	
Type FM 450 Ex Ref. no. 1693	
Attenuators	421 on
Shutters and grilles	487 on
Speed controllers and switches	525 on

HQ

HW

HRF

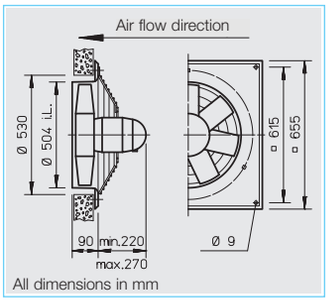

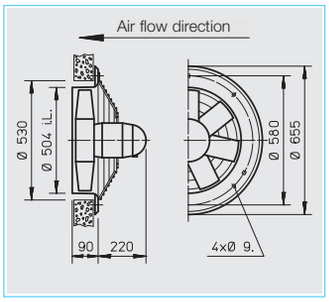

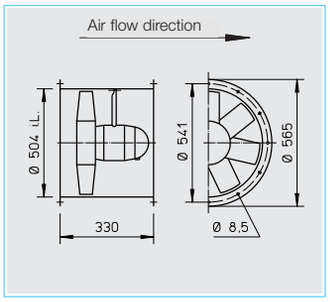

■ Specification for all models

☐ Casing
Manufactured in galvanised sheet steel. Model HQ and HW have an additional two-layer finishing in papyrus white. Ex-models without paint.

☐ Impeller
Highly efficient, profiled blade impeller, dynamically balanced and manufactured from impact resistant polymers. Suitable for –30 to +60 °C. Deviation for ex-models.

☐ Motor
Totally enclosed motor with a die-cast aluminium casing, protected to IP 55. Ball bearing mounted. Maintenance-free and interference-free. Humidity protection of windings. For maximum air flow temp. see table below. Deviation for ex-models.

☐ Motor protection
All models (explosion proof excluded) have thermal contacts as standard which must be connected to a motor protection unit (see below).

☐ Electrical connection
Terminal box (IP 55) mounted on rear of motor as standard. Also on outside of piping for HRF. Deviation for ex-models.

☐ Guard
Powder-coated steel wire for HQ and HW (HQ ex-models galvanised) according to DIN EN ISO 13857.

☐ Speed control
For all speed controllable models the current are identified with a value in the "speed controlled" column of the table below which must be used when selecting a controller. Possible allocations of frequency inverters are specified in the table below. The planned use of a frequency inverter without Sine filter must be stated when ordering. This requires a change of fan design and potential additional costs.
The air flow rates are shown in the performance curves.

☐ Reversed operation
All models are reversible when wired to a reversing switch. For reverse air flow direction allow a loss in performance of approx. 1/3.

☐ Installation
Installation in any position. Ensure that the motor drainage holes face downwards.

☐ Dimensions
Pole-switch and explosion proof models may deviate from the information above.

☐ Sound levels
See characteristic curve. The sound power and sound pressure are specified at 4 m distances under free field conditions, for average operating point suction/pressure side. See page 10 on for sound emission and acoustics. Deviation for ex-models.

☐ Information	Page
Techn. description	140
Selection chart	141
Information for planning	10 on

Made to order designs
Alternative voltages, protection classes, air flow direction, air flow temperature, acid protection and cast aluminium impellers are available on request.

R.P.M.	Air flow volume (FID)	Motor power	Current* standard-supply	Current* max. controlled	Wiring diagram	max. air flow temp. standard supply	max. air flow temp. speed controlled	Weight net	Model HQ incl. guard	Ref. no.	Model HW incl. guard	Ref. no.	Model HRF	Ref. no.
min⁻¹	V m³/h	W	A	A	No.	+°C	+°C	kg						
1 Phase motor, 230 Volt / 50 Hz, capacitor motor, protection to IP 55														
935	5500	233	1.05	1.25	475[1)]	60	40	19.0	**HQW 500/6**	1112	—	—	**HRFW 500/6**[1)]	0210
1375	8320	1100*	5.90*	4.94	475[1)]	40	40	25.0	**HQW 500/4**	1113	—	—	**HRFW 500/4**[1)]	0211
3 Phase motor, 400 Volt / 50 Hz, squirrel cage motor protection to IP 55														
920	5480	218	0.48	0.55	469	60	40	19.0	**HQD 500/6**	1126	—	—	**HRFD 500/6**	0232
1345	8200	620	1.22	1.32	469	40	40	19.5	**HQD 500/4**	1127	**HWD 500/4**	1030	**HRFD 500/4**	0233
Two-speed, 3 ph., 400 V, 50 Hz, Y/△ switch, protection to IP 55														
615/920	4330/5450	133/214	0.29/0.46	—	520	60	—	18.0	**HQD 500/6/6**	1471	—	—	—	—
1030/1350	6720/8150	416/617	0.76/1.19	—	520	60	—	24.0	**HQD 500/4/4**	1469	—	—	**HRFD 500/4/4**	1470
2450/2830	13615/12050	1960/2470*	3.14/4.73*	—	520	40	—	30.0	—	—	—	—	**HRFD 500/2/2**	0485
2 speed motor, pole-switching, Dahlander windings, 400 Volt, 50 Hz, protection to IP 55														
465/940	2680/5490	71/248	0.23/0.56	—	472	60	—	18.0	**HQD 500/12/6**	1140	—	—	—	—
700/1385	3890/8280	137/688	0.52/1.48	—	472	40	—	22.0	**HQD 500/8/4**	1142	—	—	**HRFD 500/8/4**	0407
Explosion proof Ex e II, 3 ph., 400 Volt, 50 Hz, protection to IP 55, temp. class T1-T3														
920	5610	250*	0.97*	—	470	40	—	18.0	**HQD 500/6 Ex**	1050	—	—	**HRFD 500/6 Ex**	0489
1390	8560	750*	2.00*	—	470	40	—	18.0	**HQD 500/4 Ex**	1157	—	—	**HRFD 500/4 Ex**	0483

* Motor nominal values, Ex see info page 16. 1) Type HRFW: connect using wiring diagram no. SS-965. 2) Incl. full motor protection. 3) Incl. pole switch.

500/2

Frequency		Hz	Total	125	250	500	1k	2k	4k	8k
L_{WA}	Air noise	dB(A)	101	75	92	94	99	93	90	82
$L_{PA,4m}$	Air noise	dB(A)	81	55	72	74	79	73	70	62

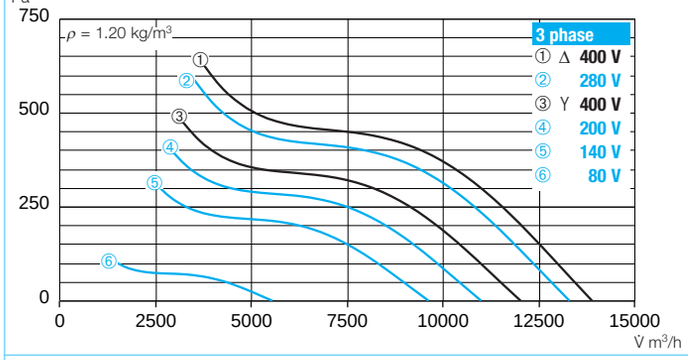

500/4

Frequency		Hz	Total	125	250	500	1k	2k	4k	8k
L_{WA}	Air noise	dB(A)	81	56	74	75	75	74	69	63
$L_{PA,4m}$	Air noise	dB(A)	61	36	54	55	55	54	49	43

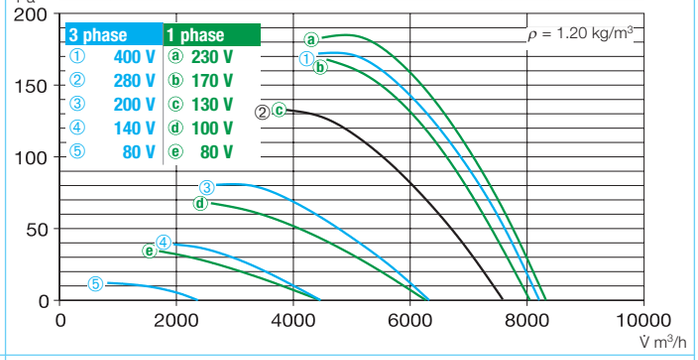

500/6

Frequency		Hz	Total	125	250	500	1k	2k	4k	8k
L_{WA}	Air noise	dB(A)	71	55	62	65	65	64	59	51
$L_{PA,4m}$	Air noise	dB(A)	51	35	42	45	45	44	39	31

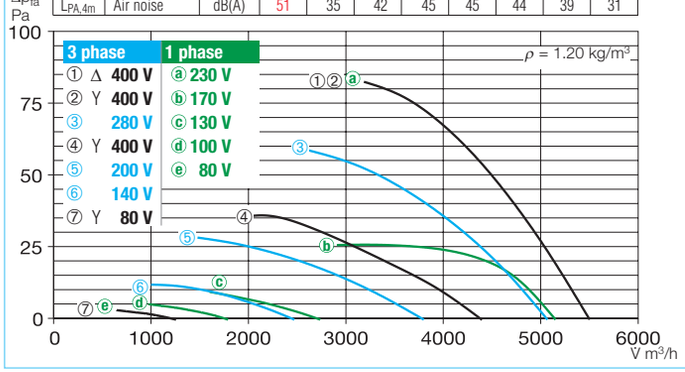

500/8

Frequency		Hz	Total	125	250	500	1k	2k	4k	8k
L_{WA}	Air noise	dB(A)	82	55	73	76	77	75	70	63
$L_{PA,4m}$	Air noise	dB(A)	62	35	53	56	57	55	50	43

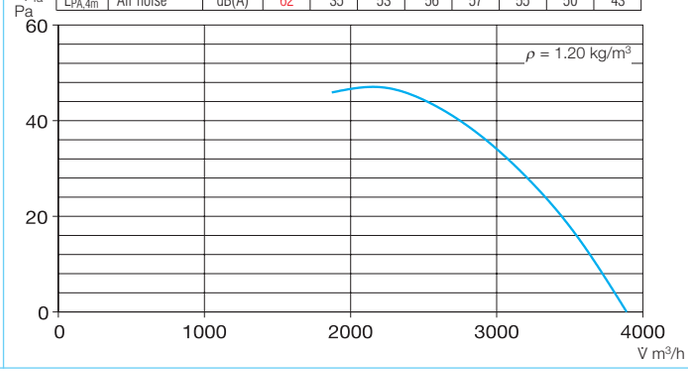

Accessories for HRF Description see page 230 on

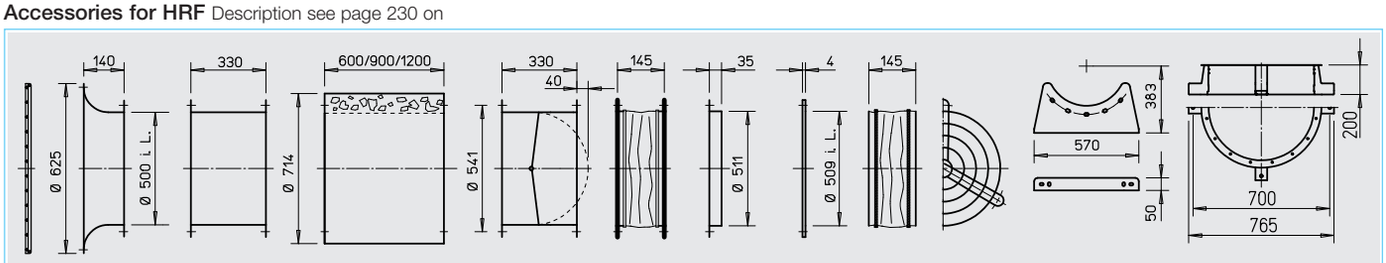

Bell mount with guard	Extension duct	Circular attenuator	Automatic back-draught shutter	Flang. flex. connector	Counter-flange	Flat flange	Flexible sleeve	Guard	2 mounting feet	Mounting ring for vertical mounting
ASD-SGD 500	**VR 500**	**RSD 500/..**	**RVS 500** a)	**STS 500** b)	**FR 500**	**FF 500**	**FM 500** b)	**SG 500**	**1 x MK 500**	**MRV 500**
No. 1420	No. 1408		No. 2598	No. 1225	No. 1208	No.4947	No. 1678	No. 1241	(= 2 pcs) No. 1450	No. 1740

a) For motorised shutters see accessory page

b) Models for ex-proof fans see below

Frequency inverter with integrated Sine filter		Transformer controller 5-speed Pole switch		Electronic controller, stepless flush/surf.		Full motor protection for connection of integrated thermal contacts		Reversing switch	
Model	Ref. no.	**Model**	Ref. no.	**Model**	Ref. no.	**Model**	Ref. no.	**Model**	Ref. no.
—	—	**MWS 1,5** 2)	1947	**ESU 3/ESA 3**	0237/0239	**MW**	1579	**WS**	1271
—	—	**MWS 5** 2)	1949	**ESU 5/ESA 5**	1296/1299	**MW**	1579	**WS**	1271
FU-BS 2,5 2)	5459	**RDS 1** 2)	1314	**ESD 5** 2)	0501	**MD**	5849	**WS**	1271
FU-BS 2,5 2)	5459	**RDS 2** 2)	1315	**ESD 5** 2)	0501	**MD**	5849	**WS**	1271
		Speed switch							
FU-BS 2,5 2)	5459	**DS 2** 5)	1351	—	—	**M 4** 4)**/MD**	1571/5849	**WS**	1271
FU-BS 2,5 2)	5459	**DS 2** 5)	1351	**ESD 5** 2)	0501	**M 4** 4)**/MD**	1571/5849	**WS**	1271
FU-BS 5,0 2)	5460	**RDS 7** 2)	1578	**ESD 11,5** 2)	0502	**M 4** 4)**/MD**	1571/5849	**WS**	1271
		Pole switch							
—	—	**PDA 12** 4)	5081	—	—	**M 3** 3)	1293	**PWDA**	1282
—	—	**PDA 12** 4)	5081	—	—	**M 3** 3)	1293	**PWDA**	1282
—	—	not permitted		not permitted		—	—	—	—
—	—	not permitted		not permitted		—	—	—	—

4) See switch product page for flush mounted version.

5) Speed switch.

Other accessories — Page

b) **Accessories for explosion proof fans**

Flanged flexible connector
Type STS 500 Ex Ref. no. 2507

Flexible sleeve
Type FM 500 Ex Ref. no. 1694

Extension tube for HS
Type VH 500 Ref. no. 1348
Cylindrical duct, galvanised steel, length: 150 mm.

Attenuators 421 on
Shutters and grilles 487 on
Speed controllers and switches 525 on

HQ

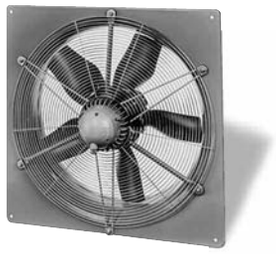

HRF

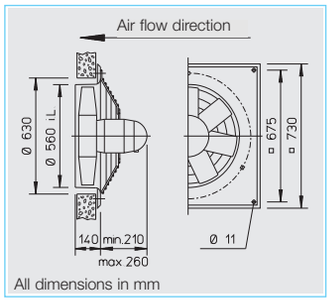

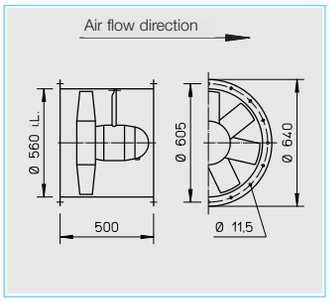

■ Specification for all models

☐ Casing
Manufactured in galvanised sheet steel. Model HQ have an additional two-layer finishing in papyrus white. Ex-models without paint.

☐ Impeller
Highly efficient, profiled blade impeller, dynamically balanced and manufactured from impact resistant polymers. Suitable for –30 to +60 °C. Deviation for ex-models.

☐ Motor
Totally enclosed motor with a die-cast aluminium casing, protected to IP 55. Ball bearing mounted. Maintenance-free and interference-free. Humidity protection of windings. For maximum air flow temperature see table below. Deviation for ex-models.

☐ Motor protection
All models (except explosion proof) have thermal contacts as standard which must be connected to a motor protection unit (see below) for effective motor protection.

☐ Electrical connection
Terminal box (IP 55) mounted on rear of motor as standard. Also on outside of piping for HRF. Deviation for ex-models.

☐ Guard
Powder-coated steel wire for HQ (Ex-models galvanised) according to DIN EN ISO 13857.

☐ Speed control
For all speed controllable models the current are identified with a value in the "speed controlled" column of the table below which must be used when selecting a controller. Possible allocations of frequency inverters are specified in the table below. The planned use of a frequency inverter without Sine filter must be stated when ordering. This requires a change of fan design and potential additional costs.
The air flow rates are shown in the performance curves.

☐ Reversed operation
All models are reversible when wired to a reversing switch. For reverse air flow direction allow a loss in performance of approx. 1/3.

☐ Installation
Installation in any position. Ensure that the motor drainage holes face downwards.

☐ Dimensions
Pole-switch and explosion proof models may deviate from the information above.

☐ Sound levels
See characteristic curve. The sound power and sound pressure are specified at 4 m distances under free field conditions, for average operating point suction/pressure side. See page 10 on for sound emission and acoustics. Deviation for ex-models.

R.P.M.	Air flow volume (FID)	Motor power (nominal)*	Current* standard-supply	Current* max. controlled	Wiring diagram	max. air flow temp. standard supply	max. air flow temp. speed controlled	Weight net	Model HQ incl. guard	Ref. no.	Model HRF	Ref. no.	Transformer controller for 5 speed pole switch Model	Ref. no.	Electronic controller, stepless flush/surf. Model	Ref. no.
min-1	V m3/h	kW	A	A	No.	+°C	+°C	kg								
1 Phase motor, 230 Volt / 50 Hz, capacitor motor, protection to IP 55																
935	8130	0.27	1.40	2.00	475 1)	60	40	24.0	**HQW 560/6**	0385	**HRFW 560/6** 1)	0380	**MWS 3** 2)	1948	**ESU 3/ESA 3**	0237/0239
1370	12180	0.89	4.15	5.00	965	60	40	31.0	**HQW 560/4**	5054	**HRFW 560/4**	5055	**MWS 7,5** 2)	1950	**ESU 5/ESA 5**	1296/1299
3 Phase motor, 400 Volt / 50 Hz, squirrel cage motor protection to IP 55																
965	8180	0.28	0.79	1.00	469	60	40	26.0	**HQD 560/6**	0386	**HRFD 560/6**	0381	**RDS 2** 2)	1315	**ESD 5** 2)	0501
1365	12250	0.88	1.71	1.80	469	40	40	29.0	**HQD 560/4**	0387	**HRFD 560/4**	0382	**RDS 2** 2)	1315	**ESD 5** 2)	0501
2 speed motor, pole-switching, Dahlander windings, 400 Volt, 50 Hz, protection to IP 55													Pole switch			
470/955	4000/8130	0.089/0.298	0.55/0.74	—	472	60	—	24.0	**HQD 560/12/6**	0389	**HRFD 560/12/6**	0384	**PDA 12** 3)	5081	—	—
720/1365	6400/12130	0.20/0.92	0.80/1.77	—	472	40	—	26.0	**HQD 560/8/4**	0388	**HRFD 560/8/4**	0383	**PDA 12** 3)	5081	—	—
Explosion proof Ex e II, 3 ph., 400 Volt, 50 Hz, protection to IP 55, temp. class T1-T3																
920	8090	0.25*	0.97*	—	470	40	—	23.0	**HQD 560/6 Ex**	0378	**HRFD 560/6 Ex**	0376	not permitted		not permitted	
1390	12890	0.75*	2.00*	—	470	40	—	24.0	**HQD 560/4 Ex**	0379	**HRFD 560/4 Ex**	0377	not permitted		not permitted	

* Ex-models: for nominal value of motor see information on page 16 1) Type HRFW: connect using wiring diagram no. SS-965 2) Incl. full motor protection 3) see switch product page for flush mounted version

560/4

Frequency		Hz	Total	125	250	500	1k	2k	4k	8k
L_{WA}	Air noise	dB(A)	82	66	68	74	78	78	74	68
$L_{PA,4m}$	Air noise	dB(A)	65	46	48	54	58	58	54	48

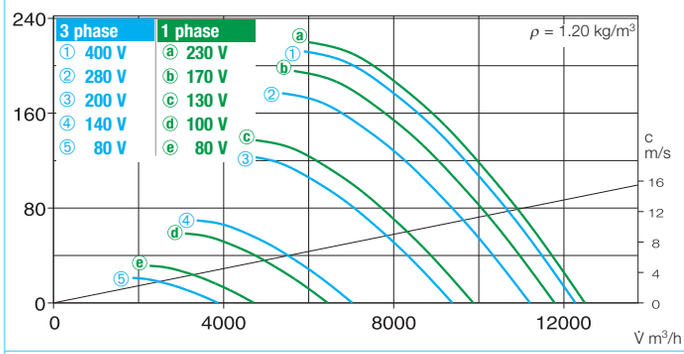

560/6

Frequency		Hz	Total	125	250	500	1k	2k	4k	8k
L_{WA}	Air noise	dB(A)	72	52	59	66	68	67	63	53
$L_{PA,4m}$	Air noise	dB(A)	52	32	39	46	48	47	43	33

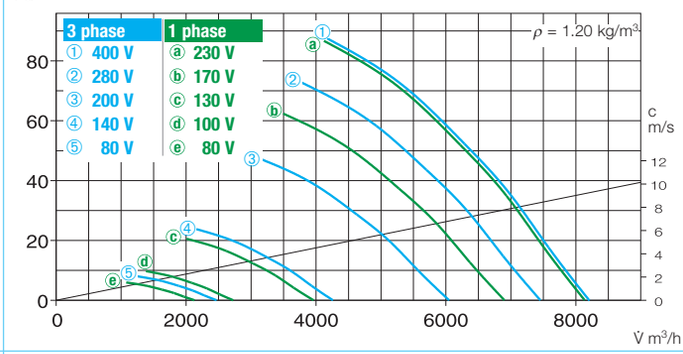

560/8

Frequency		Hz	Total	125	250	500	1k	2k	4k	8k
L_{WA}	Air noise	dB(A)	82	66	68	74	78	78	74	68
$L_{PA,4m}$	Air noise	dB(A)	65	46	48	54	58	58	54	48

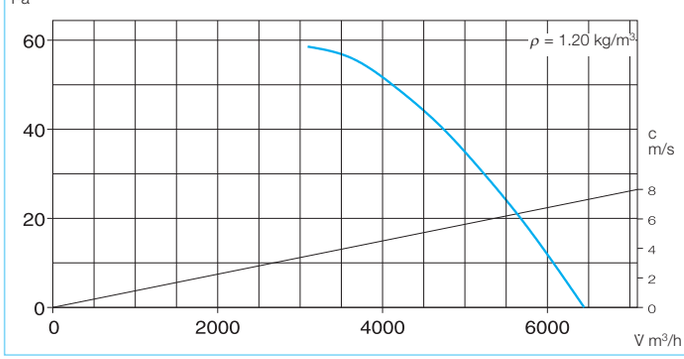

560/12

Frequency		Hz	Total	125	250	500	1k	2k	4k	8k
L_{WA}	Air noise	dB(A)	72	52	59	66	68	67	63	53
$L_{PA,4m}$	Air noise	dB(A)	52	32	39	46	48	47	43	33

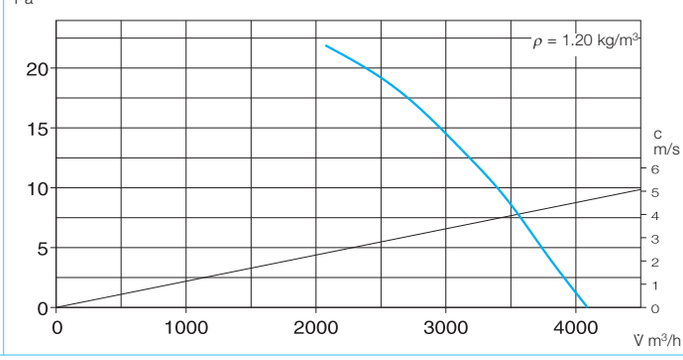

Accessories for HRF Description see page 230 on

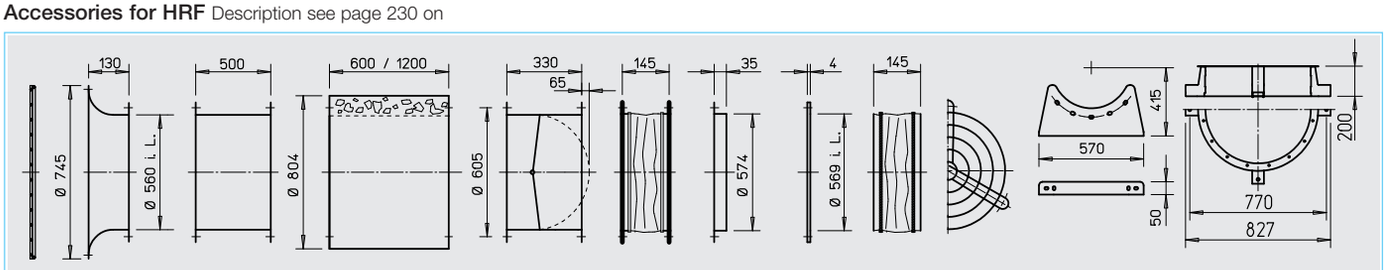

Bell mount + guard	Extension duct	Circular attenuators	Automatic back-draught shutter	Flang. flex. connector	Counter-flange	Flat flange	Flexible sleeve	Guard	2 mounting feet	Mounting ring for vertical mounting
ASD-SGD 560	**VR 560**	**RSD 560/..**	**RVS 560** a)	**STS 560** b)	**FR 560**	**FF 560**	**FM 560** b)	**SG 560**	**1 x MK 560**	**MRV 560**
No. 1421	No. 1409		No. 2599	No. 1226	No. 1209	No.4948	No. 1679	No. 1242	(= 2 pcs.) No. 1450	No. 1741

a) For motorised shutters see accessory page

b) Models for ex-proof fans see below

Electronic controller for stepless control		Full motor protection starter using the motor thermal contacts		Reversing switch	
Model	Ref. no.	**Model**	Ref. no.	**Model**	Ref. no.
—	—	**MW**	1579	**WS**	1271
—	—	**MW**	1579	**WS**	1271
FU-BS 2,5 2)	5459	**MD**	5849	**WS**	1271
FU-BS 2,5 2)	5459	**MD**	5849	**WS**	1271
—	—	**M 3** 4)	1293	**PWDA**	1282
—	—	**M 3** 4)	1293	**PWDA**	1282
—	—	—	—	—	—
—	—	—	—	—	—

4) Incl. pole switch

Information	Page
Techn. description	140
Selection chart	141
Information for planning	10 on

Made to order designs
Alternative voltages, protection classes, air flow direction, air flow temperature, acid protection and cast aluminium impellers are available on request.

Note the technical information on page 15 on.

Other accessories	Page
b) **Accessories for explosion proof fans**	
Flanged flexible connector Type STS 560 Ex Ref. no. 2508	
Flexible sleeve Type FM 560 Ex Ref. no. 1695	
Attenuators	434 on
Shutter and grilles	487 on
Speed controllers and switches	525 on

HQ

HW

HRF

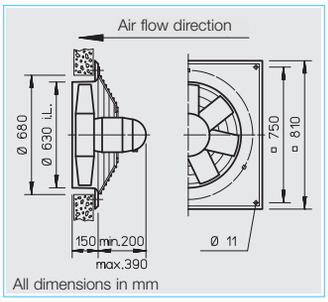

All dimensions in mm

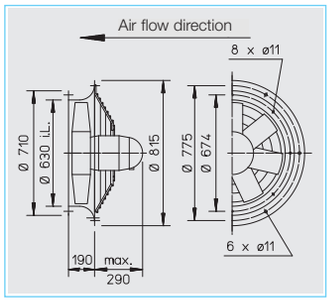

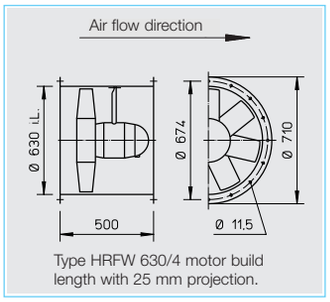

Type HRFW 630/4 motor build length with 25 mm projection.

■ Specification for all models

☐ Casing
Manufactured in galvanised sheet steel.

☐ Impeller
Highly efficient, profiled blade impeller, dynamically balanced and manufactured from impact resistant polymers. Suitable for –30 to +60 °C. Deviation for ex-models.

☐ Motor
Totally enclosed motor with a die-cast aluminium casing, protected to IP 55. Ball bearing mounted. Maintenance-free and interference-free. Humidity protection of windings. For maximum air flow temperature see table below. Deviation for ex-models.

☐ Motor protection
All models (except ../8/4 and explosion proof) have thermal contacts as standard which must be connected to a motor protection unit (see below) for effective motor protection. Motors without thermal contacts must be protected by a conventional circuit breaker.

☐ Electrical connection
Terminal box (IP 55) mounted on motor as standard. Also on outside of piping for HRF. Deviation for ex-models.

☐ Guard
Powder-coated steel wire for HQ and HW (HQ.. Ex galvanised) according to DIN EN ISO 13857.

☐ Speed control
For all speed controllable models the current are identified with a value in the "speed controlled" column of the table below which must be used when selecting a controller. Possible allocations of frequency inverters are specified in the table below. The planned use of a frequency inverter without Sine filter must be stated when ordering. This requires a change of fan design and potential additional costs.
The air flow rates are shown in the performance curves.

☐ Reversed operation
All models are reversible when wired to a reversing switch.
For reverse air flow directional-low a loss in performance of approx. 1/3.

☐ Installation
Installation in any position.
Ensure that the motor drainage holes face downwards.

☐ Dimensions
Pole-switch and explosion proof models may deviate from the information above.

☐ Sound levels
See characteristic curve. The sound power and sound pressure are specified at 4 m distances under free field conditions, for average operating point suction/pressure side.
See page 10 on for sound emission and acoustics.
Deviation for ex-models.

R.P.M.	Air flow volume (FID)	Motor power (nominal)*	Current* standard-supply	Current* max. controlled	Wiring diagram	max. air flow temp. standard supply	max. air flow temp. speed controlled	Weight net	Model HQ incl. guard	Ref. no.	Model HW incl. guard	Ref. no.	Model HRF	Ref. no.	Transformer controller for 5 speed pole switch Model	Ref. no.
min-1	V m3/h	kW	A	A	No.	+°C	+°C	kg								
1 Phase motor, 230 Volt / 50 Hz, capacitor motor, protection to IP 55																
950	10530	0.44	2.16	3.20	475	60	40	28.0	**HQW 630/6**	5037	—	—	—	—	**MWS 3 1)**	1948
1325	16210	1.50*	8.40*	7.00	964	40	—	40.0	**HQW 630/4**	5056	—	—	**HRFW 630/4**	5057	**MWS 7,5 1)**	1950
3 Phase motor, 400 Volt / 50 Hz, squirrel cage motor protection to IP 55																
710	7810	0.20	0.66	0.70	469	40	40	27.0	**HQD 630/8**	5029	—	—	—	—	**RDS 2 1)**	1315
960	10560	0.44	1.22	—	469	60	40	30.5	**HQD 630/6**	5027	**HWD 630/6**	1032	**HRFD 630/6**	0244	**RDS 2 1)**	1315
Two-speed, 3 ph., 400 V, 50 Hz, Y/△ switch, protection to IP 55																
1170/1390	14310/17000	0.90/1.57	2.3/3.8	—	520	40	—	37.5	**HQD 630/4/4**	5030	**HWD 630/4/4**	1033	**HRFD 630/4/4**	0245	**RDS 4 1)**	1316
2 speed motor, pole-switching, Dahlander windings, 400 Volt, 50 Hz, protection to IP 55																
440/935	5290/10470	0.14/0.43	0.60/1.13		472	60	—	41.0	**HQD 630/12/6**	5031	—	—	**HRFD 630/12/6**	0410	**PDA 12 2)**	5081
690/1400	7990/15990	0.37/1.50*	1.33/3.70*		471	40	—	40.5	**HQD 630/8/4**	5032	—	—	**HRFD 630/8/4**	0411	**PDA 12 2)**	5081
Explosion proof Ex e II, 3 ph., 400 Volt, 50 Hz, protection to IP 55, temp. class T1-T3																
910	10480	0.55*	1.75*		470	40	—	30.0	**HQD 630/6 Ex**	5035	—	—	**HRFD 630/6 Ex**	0494	not permitted	
1410	17730	1.35*	3.10*		470	40	—	35.0	**HQD 630/4 Ex**	5036	—	—	**HRFD 630/4 Ex**	0495	not permitted	

* Ex-models: for nominal value of motor see information on page 16 1) Incl. full motor protection 2) see switch product page for flush mounted version

630/4

Frequency		Hz	Total	125	250	500	1k	2k	4k	8k
L_{WA}	Air noise	dB(A)	85	69	71	77	81	77	70	65
$L_{PA,4m}$	Air noise	dB(A)	65	49	51	57	61	61	57	50

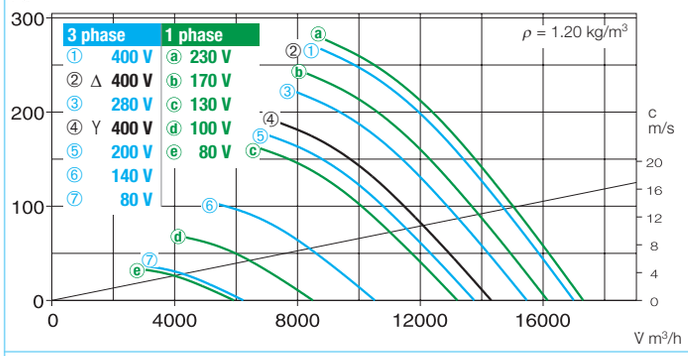

630/6

Frequency		Hz	Total	125	250	500	1k	2k	4k	8k
L_{WA}	Air noise	dB(A)	75	55	62	69	71	70	66	56
$L_{PA,4m}$	Air noise	dB(A)	55	35	41	49	51	50	46	36

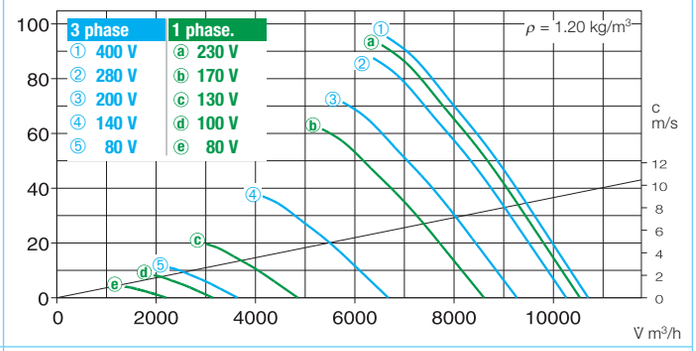

630/8

Frequency		Hz	Total	125	250	500	1k	2k	4k	8k
L_{WA}	Air noise	dB(A)	85	69	71	77	81	77	70	65
$L_{PA,4m}$	Air noise	dB(A)	65	49	51	57	61	61	57	50

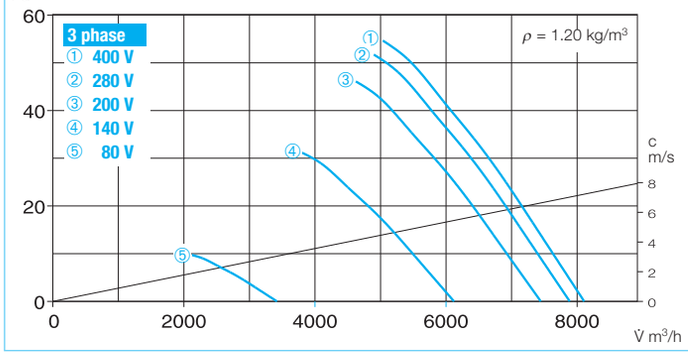

630/12

Frequency		Hz	Total	125	250	500	1k	2k	4k	8k
L_{WA}	Air noise	dB(A)	75	55	62	69	71	70	66	56
$L_{PA,4m}$	Air noise	dB(A)	55	35	41	49	51	50	46	36

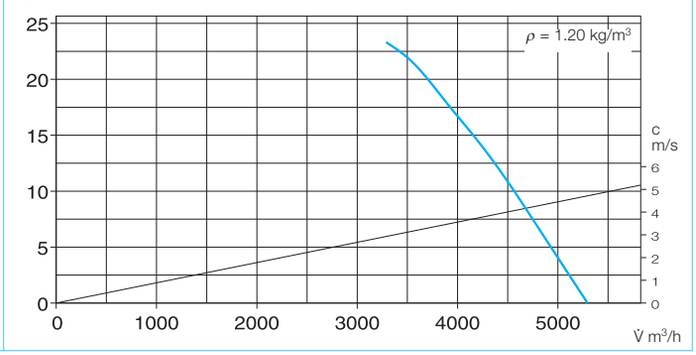

Accessories for HRF Description see page 230 on

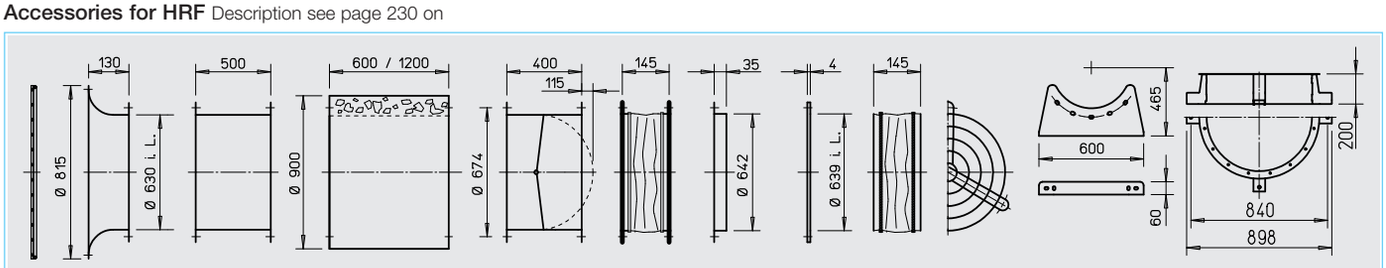

Bell mount + guard	Extension duct	Circular attenuators	Automatic back-draught shutter	Flang. flex. connector	Counter flange	Flat flange	Flexible sleeve	Guard	2 mounting feet	Mounting ring for vertical mounting
ASD-SGD 630	**VR 630**	**RSD 630/..**	**RVS 630** a)	**STS 630** b)	**FR 630**	**FF 630**	**FM 630** b)	**SG 630**	**1 x MK 630**	**MRV 630**
No. 1422	No. 1410		No. 2600	No. 1228	No. 1211	No. 4949	No. 1680	No. 1243	(= 2 pcs.) No. 1333	No. 1742

a) For motorised shutters see accessory page

b) Models for ex-proof fans see below

Frequency inverter with integrated Sine filter		Electronic controller, stepless flush/surf.		Full motor protection for connection of integrated thermal contacts		Reversing switch	
Model	Ref. no.	**Model**	Ref. no.	**Model**	Ref. no.	**Model**	Ref. no.
—	—	**ESU 5/ESA 5**	1296/1299	**MW**	1579	**WS**	1271
—	—	—	—	**MW**	1579	**WS**	1271
FU-BS 2,5 1)	5459	**ESD 5** 1)	0501	**MD**	5849	**WS**	1271
FU-BS 2,5 1)	5459	**ESD 5** 1)	0501	**MD**	5849	**WS**	1271
FU-BS 5,0 1)	5460	**ESD 5** 1)	0501	**M 4** 3)	1571	**WS**	1271
—	—	—	—	**M 3** 3)	1293	**PWDA**	1282
—	—	—	—	**M 3** 3)	1293	**PWDA**	1282
—	—	not permitted		—	—	—	—
—	—	not permitted		—	—	—	—

3) Incl. pole switch

Information	Page
Techn. description	140
Selection chart	141
Information for planning	10 on

Made to order designs
Alternative voltages, protection classes, air flow direction, air flow temperature, acid protection and cast aluminium impellers are available on request.

Note the technical information on page 15 on.

Other accessories	Page
b) **Accessories for explosion proof fans**	
Flanged flexible connector Type STS 630 Ex Ref. no. 2509	
Flexible sleeve Type FM 630 Ex Ref. no. 1696	
Attenuators	434 on
Shutter and grilles	487 on
Speed controllers and switches	525 on

HQ

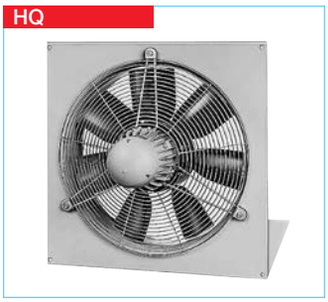

AVD DK

HRF/AVD RK

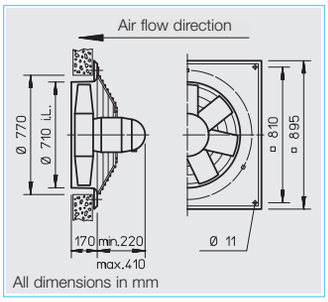

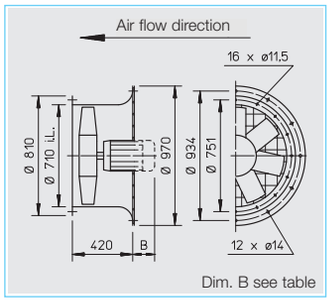

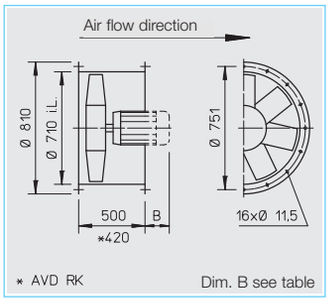

■ Specification for all models

☐ Casing
With motor support manufactured from galvanised sheet steel.

☐ Impeller
Highly efficient, profiled blade impeller, dynamically balanced and manufactured from impact resistant polymers. Suitable for –30 to +60 °C. Deviation for ex-models.

☐ Pitch angle
The impeller blades are adjustable for the optimal coverage of the operating point (except HQW 710/6 and explosion proof). The pitch angle is set at the factory (according to the order) and fixed. The motor allocation takes place using the maximum power pursuant to the information in the table below. The specified pitch angle shown for each motor must not be exceeded.

☐ Motor
Totally enclosed motor protected to IP 55. Maintenance-free and interference-free. Humidity protection of tropicalized windings. Deviation for ex-models.

☐ Motor protection
All models (except pole switching and explosion proof) have thermal contacts or PTC thermistors and according to footnotes in the table to protect through the following full motor protection units:
[1] MW/MD, Ref. no. 1579/5849
[2] MSA, Ref. no. 1289
(for PTC thermistor temp. sens)
[3] M4, Ref. no. 1571
All other models have to be protected by a conventional circuit breaker on site.

☐ Guard
Hot-dipped or powder-coated as standard for HQ and AVD DK according to DIN EN ISO 13857.

☐ Electrical connection
Terminal box protected to IP 54 mounted on motor. Outside of piping for HRF. Deviation for ex-models.

☐ Speed control
Partial through voltage reduction, see the "transformer controller" column. Regulated performance curve upon request. Possible allocations of frequency inverters for all types (except pole-switch and ex-proof). The planned use of a frequency inverter without Sine filter must be stated when ordering. This requires a change of fan design and potential additional costs.

☐ Reversed operation
All models are reversible when wired to a reversing switch. For reverse air flow direction allow a loss in performance of approx. 1/3.

☐ Installation
Installation in any position. Ensure that the motor drainage holes face downwards.

☐ Dimensions
Pole-switch and explosion proof models may deviate from the adjacent information. Motor build lengths vary. Note dimension B projection.

☐ Sound levels
The sound power levels are specified through the frequency and as sum levels above the characteristic curves. Deviation for ex-models.

R.P.M.	Air flow volume (FID)	Motor power (nominal)*	Voltage	Power con. nom. volt./ (control)*	max. pitch angle	Wiring diagram	max. air flow temp.	Weight net**)	Model						Dim. B motor projection	Transformer controller for 5 speed pole switch	
									HQ incl. guard	Ref. no.	AVD DK incl. guard	Ref. no.	HRFD, AVD RK	Ref. no.			
min⁻¹	V m³/h	kW	V	A	°	No.	+°C	kg							mm	Model	Ref. no.
1 Phase motor, 230 Volt / 50 Hz, capacitor motor, protection to IP 55																	
910	14200	0.60	230	2.6	25	965	40	40.0	**HQW 710/6 [1]**	5047	—	—	—	—	—	**MWS 5 [4]**	1949
3 Phase motor, 400 Volt / 50 Hz, squirrel cage motor protection to IP 55																	
690	13330	0.29	400	0.9	20	469	40	57.0	**HQD 710/8 [1]**	5599	**AVD DK 710/8 [1]**	5251	**HRFD 710/8 [1]**	6930	95	**RDS 2 [4]**	1315
940	15560/19170	1.1*	230/400	5.1*	35	499	40	60.0	**HQD 710/6 [1]**	5603	**AVD DK 710/6 [1]**	5255	**HRFD 710/6 [1]**	6934	135	**RDS 7 [4]**	1578
1445	26420	3.00*	400/690	6.2*	30	776	40	88.0	**HQD 710/4 [2]**	5606	**AVD DK 710/4 [2]**	5258	**HRFD 710/4 [2]**	6937	180	—	—
Two-speed, 3 ph., 400 V, 50 Hz, protection to IP 55																	
730/890	13550/16090	0.4/0.75*	400/400	1.1/2.3*	25	520	40	55.0	**HQD 710/6/6 [3]**	5602	**AVD DK 710/6/6 [3]**	5254	**HRFD 710/6/6 [3]**	6933	95	**RDS 4 [4]**	1316
1120/1360	16140/19670	0.95/1.55*	400/400	2.4/4.2*	20	520	40	60.0	**HQD 710/4/4 [3]**	5604	**AVD DK 710/4/4 [3]**	5256	**HRFD 710/4/4 [3]**	6935	135	**RDS 7 [4]**	1578
1030/1340	19370/23280	1.5/2.2*	400/400	3.0/5.2*	26	520	40	75.0	**HQD 710/4/4 [3]**	5605	**AVD DK 710/4/4 [3]**	5257	**HRFD 710/4/4 [3]**	6936	180	**RDS 7 [4]**	1578
2 speed motor, pole-switching, Dahlander windings, 400 Volt, 50 Hz, protection to IP 54																	
685/1430	10810/22090	0.5/2.0*	400/400	2.0/4.7	23	471	40	82.0	**HQD 710/8/4/..**	5611	**AVD DK 710/8/4/..**	5263	**HRFD 710/8/4/..**	6942	180	**PDA 12 [5]**	5081
720/1440	14155/29020	0.9/3.6*	400/400	2.9/8.3	30	471	40	108.0	**HQD 710/8/4/..**	5612	**AVD DK 710/8/4/..**	5264	**AVD RK 710/8/4/..**	6943	210	**PDA 12 [5]**	5081
Explosion proof Ex e II, 3 ph., 400 Volt, 50 Hz, protection to IP 55, temp. class T1-T3																	
700	10450	0.55*	400	2.2*	35	470	40	68.0	**HQD 710/8 Ex**	5618	**AVD DK 710/8 Ex**	5270	**HRFD 710/8 Ex**	6948	125	not permitted	
930	13480	0.55*	400	1.8*	25	470	40	67.0	**HQD 710/6 Ex**	5620	**AVD DK 710/6 Ex**	5272	**HRFD 710/6 Ex**	6949	95	not permitted	
930	16770	0.95*	400	2.7*	35	470	40	77.0	**HQD 710/6 Ex**	5621	**AVD DK 710/6 Ex**	5273	**HRFD 710/6 Ex**	6950	135	not permitted	
1420	20540	2.00*	400	4.7*	25	470	40	82.0	**HQD 710/4 Ex**	5623	**AVD DK 710/4 Ex**	5275	**AVD RK 710/4 Ex**	6951	180	not permitted	
1420	26160	3.60*	400/690	8.1*	35	498	40	102.0	**HQD 710/4 Ex**	5624	**AVD DK 710/4 Ex**	5276	**AVD RK 710/4 Ex**	6952	200	not permitted	

*) Nominal motor amounts, Ex see info p. 16. [1] to [3] full motor proteciton unit, see "Motor protection" desc. **) Weights apply for type ..DK and ..RK, HRF and HQ less approx. 15 kg. [4] Incl. full motor protection.

710/4 — R.P.M. = 1450

Frequency		Hz	Total	125	250	500	1k	2k	4k	8k
L_{WA}	15°	dB(A)	87	71	72	79	82	83	79	72
L_{WA}	25°	dB(A)	89	73	74	81	84	85	81	74
L_{WA}	35°	dB(A)	91	75	76	83	86	87	83	76

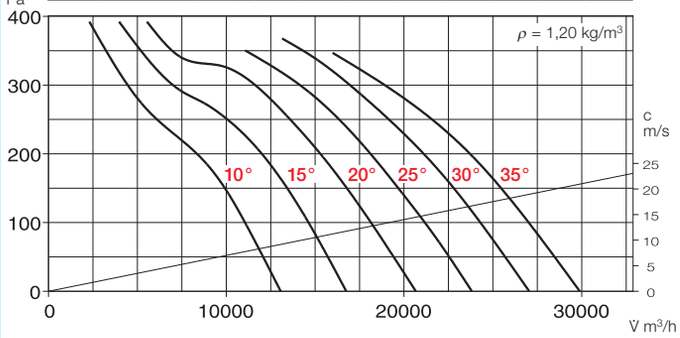

710/6 Three-phase — R.P.M. = 950

Frequency		Hz	Total	125	250	500	1k	2k	4k	8k
L_{WA}	15°	dB(A)	79	63	65	71	74	74	71	63
L_{WA}	25°	dB(A)	81	65	67	73	76	76	73	65
L_{WA}	35°	dB(A)	83	67	69	75	78	78	75	67

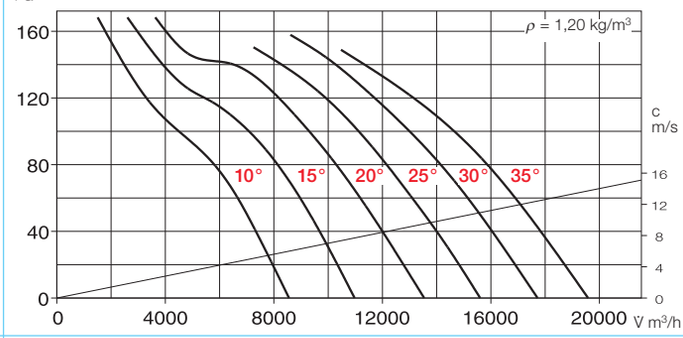

710/6 Single phase

Frequency		Hz	Total	125	250	500	1k	2k	4k	8k
L_{WA}	15°	dB(A)	79	63	65	71	74	74	71	63
L_{WA}	25°	dB(A)	81	65	67	73	76	76	73	65
L_{WA}	35°	dB(A)	83	67	69	75	78	78	75	67

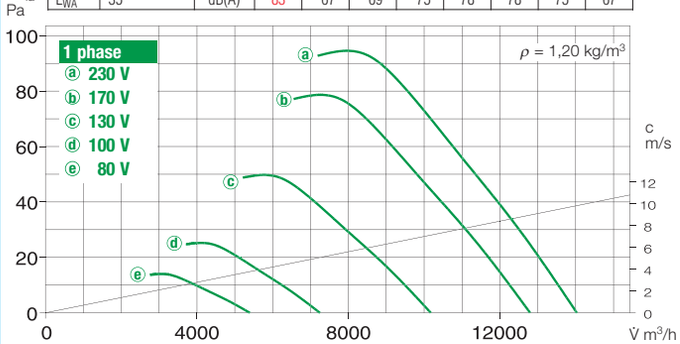

710/8 — R.P.M. = 700

Frequency		Hz	Total	125	250	500	1k	2k	4k	8k
L_{WA}	15°	dB(A)	72	53	58	65	68	67	63	54
L_{WA}	25°	dB(A)	74	55	60	67	70	69	65	56
L_{WA}	35°	dB(A)	76	57	62	69	72	71	67	58

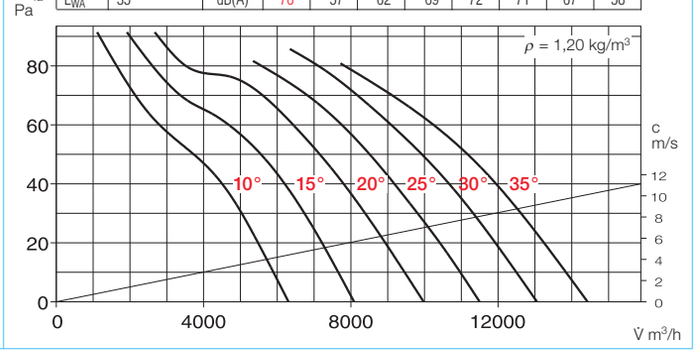

	Electronic controller, stepless Frequency inverter with Sine filter		Vibration dampers nominal size SDD / SDZ	
	Model	Ref. no.	**Model**	Ref. no.
	—	—	**..1/..1**	1452/1454
	ESD 5[4]	0501	**..1/..1**	1452/1454
	ESD 11,5[4]	0502	**..1/..1**	1452/1454
	FU-BS 8,0[4]	5461	**..2/..2**	1453/1455
	ESD 5[4]	0501	**..1/..1**	1452/1454
	ESD 5[4]	0501	**..1/..1**	1452/1454
	ESD 11,5[4]	0502	**..1/..2**	1452/1455
	—	—	**..2/..2**	1453/1455
	—	—	**..2/..2**	1453/1455
	not permitted		**..1/..2**	1452/1455
	not permitted		**..1/..2**	1452/1455
	not permitted		**..1/..2**	1452/1455
	not permitted		**..2/..2**	1453/1455
	not permitted		**..2/..2**	1453/1455

[5] see switch product page for flush mounted version.

Accessories for HRF / AVD RK Description see page 230 on

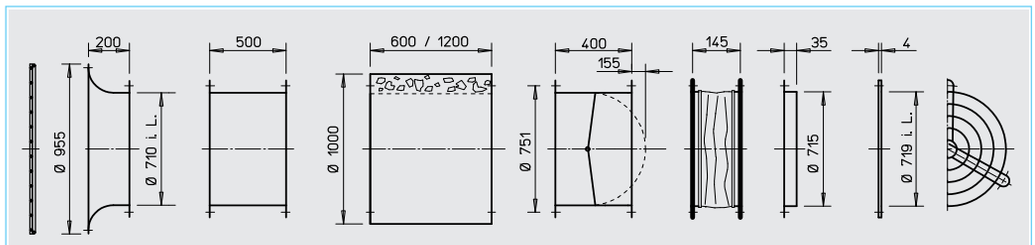

Bell mount + guard **ASD-SGD 710** No. 1423

Extension duct **VR 710** No. 1411

Circular attenuators **RSD 710/..**

Automatic back-draught shutter **RVS 710** [a] No. 2601

Flang. flex. connector **STS 710** [b] No. 1229

Counter flange **FR 710** No. 1212

Flat flange **FF 710** No. 4950

Guard **SG 710** No. 1244

[a] For motorised shutters see accessory page

[b] Models for ex-proof fans see below

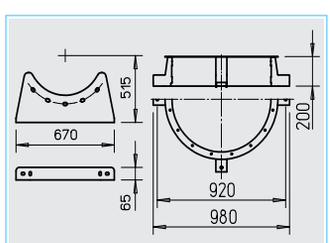

2 Mounting feet **1 x MK 710** (= 2 pcs.) No. 1372

Mounting ring for vertical mounting **MRV 710** No. 1743

Information	Page
Techn. description	140
Selection chart	141
Information for planning	10 on

Made to order designs
Alternative voltages, protection classes, air flow direction, air flow temperature, acid protection and cast aluminium impellers are available on request.

Other accessories	Page
[b] **Accessories for explosion proof fans**	
Flanged flexible connector Type STS 710 Ex Ref. no. 2510	
Attenuators	434 on
Shutter and grilles	487 on
Speed controllers and switches	525 on

AVD DK

AVD RK

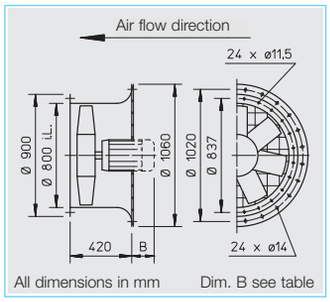

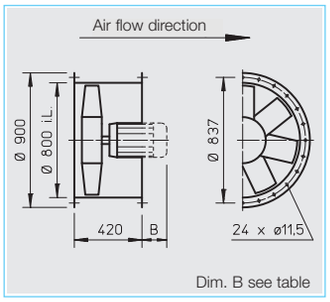

■ Specification for all models

☐ Casing
With motor support manufactured from galvanised sheet steel.

☐ Impeller
Highly efficient, profiled blade impeller, dynamically balanced and manufactured from impact resistant polymers. Suitable for –30 to +60 °C. Deviation for ex-models.

☐ Pitch angle
The impeller blades are adjustable for the optimal coverage of the operating point (except explosion proof). The pitch angle is set at the factory (according to the order) and fixed. The motor allocation takes place using the maximum power pursuant to the information in the table below. The specified pitch angle shown for each motor must not be exceeded.

☐ Motor
Totally enclosed motor protected to IP 55. Maintenance-free and interference-free. Humidity protection of tropicalized windings. Deviation for ex-models.

☐ Motor protection
All models (except pole switching and explosion proof) have thermal contacts or PTC thermistors and according to footnotes in the table to protect through the following full motor protection units:
[4]MSA, Ref. no. 1289
(for PTC thermistor temp. sens)
[5]M4, Ref. no. 1571
All other models have to be protected by a conventional circuit breaker on site.

☐ Electrical connection
Terminal box protected to IP 54 mounted on motor.

☐ Guard
According to DIN EN ISO 13857, hot-dip galvanised, as standard for AVD DK.

☐ Speed control
Partial through voltage reduction, see the “transformer controller” column. Regulated performance curve upon request. Possible allocations of frequency inverters for all types (except pole-switch and ex-proof). The planned use of a frequency inverter without Sine filter must be stated when ordering. This requires a change of fan design and potential additional costs.

☐ Reversed operation
All models are reversible when wired to a reversing switch. For reverse air flow direction allow a loss in performance of approx. 1/3.

☐ Installation
Installation in any position. Ensure that the motor drainage holes face downwards.

☐ Dimensions
Pole-switch and explosion proof models may deviate from the adjacent information. Motor build lengths vary. Note dimension B projection.

☐ Sound levels
The sound power levels are specified through the frequency and as sum levels above the characteristic curves. Deviation for ex-models.

R.P.M.	Air flow volume (FID)	Motor power (nominal)*	Voltage	Power con. nom. volt.*	max. pitch angle	Wiring diagram	max. air flow temp.	Weight net	Model: AVD DK incl. guard	Ref. no.	Model: AVD RK	Ref. no.	Dim. B motor projection	Transformer controller for 5 speed pole switch: Model	Ref. no.
min⁻¹	V m³/h	kW	V	A	°	No.	+°C	kg					mm		
Three phase, 50 Hz, squirrel-cage motor, protection to IP 54															
1445	33450	4.00*	400/690	8.3*	26	776	40	101	**AVD DK 800/4/..[4]**	5311	**AVD RK 800/4/..[4]**	6960	210	—	—
1450	39130	5.5*	400/690	11*	33	776	40	115	**AVD DK 800/4/..[4]**	5312	**AVD RK 800/4/..[4]**	6961	290	—	—
Two-speed, 3 ph., 400 V, 50 Hz, protection to IP 55															
775/920	15720/18670	0.40/0.75*	400/400	1.1/2.3*	22	520	40	70	**AVD DK 800/6/6/..[5]**	5307	**AVD RK 800/6/6/..[5]**	6956	125	**RDS 4[2]**	1316
Pole-switchable, 2-speed, 3 ph., 50 Hz, protection to IP 54														Pole switch	
695/1400	10020/20180	0.37/1.50*	400/400	1.3/3.7*	25	471	40	95	**AVD DK 800/8/4/..[1]**	5319	**AVD RK 800/8/4/..[1]**	6968	135	**PDA 12[3]**	5081
Explosion proof Ex e II, 3 ph., 50 Hz, protection to IP 55, temp. class T1-T3															
700	17190	0.55*	400	2.2*	32	470	40	81	**AVD DK 800/8 Ex/..**	5326	**AVD RK 800/8 Ex/..**	6974	135	not permitted	
930	20340	0.95*	400	2.7*	23	470	40	90	**AVD DK 800/6 Ex/..**	5329	**AVD RK 800/6 Ex/..**	6976	135	not permitted	
950	26710	1.9*	400	4.7*	35	470	40	118	**AVD DK 800/6 Ex/..**	5330	**AVD RK 800/6 Ex/..**	6977	210	not permitted	
1420	31900	3.60*	400/690	8.1*	24	498	40	115	**AVD DK 800/4 Ex/..**	5332	**AVD RK 800/4 Ex/..**	6978	210	not permitted	
1450	36820	5.00*	400/690	10.1*	30	498	40	143	**AVD DK 800/4 Ex/..**	5333	**AVD RK 800/4 Ex/..**	6979	290	not permitted	

*) Nominal motor amounts, Ex see info p. 16. 1) Dahlander winding. 2) Incl full motor protection. 3) see switch product page for flush mounted version.

800/4 — R.P.M. = 1450

Frequency		Hz	Total	125	250	500	1k	2k	4k	8k
L_{WA}	15°	dB(A)	91	75	76	82	86	86	83	76
L_{WA}	25°	dB(A)	93	77	78	84	88	88	85	78
L_{WA}	35°	dB(A)	95	79	80	86	90	90	87	80

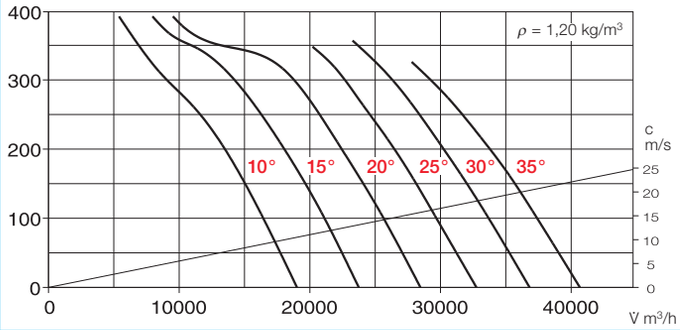

800/6 — R.P.M. = 945

Frequency		Hz	Total	125	250	500	1k	2k	4k	8k
L_{WA}	15°	dB(A)	80	65	66	72	76	76	72	65
L_{WA}	25°	dB(A)	82	67	68	74	78	78	74	67
L_{WA}	35°	dB(A)	84	69	70	76	80	80	76	69

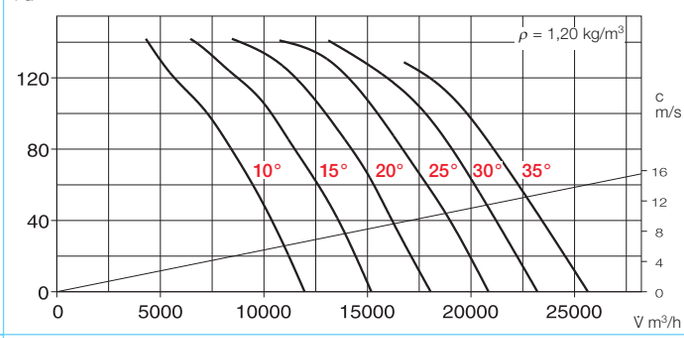

800/8 — R.P.M. = 705

Frequency		Hz	Total	125	250	500	1k	2k	4k	8k
L_{WA}	15°	dB(A)	73	55	60	67	69	68	65	65
L_{WA}	25°	dB(A)	75	57	62	69	71	70	67	67
L_{WA}	35°	dB(A)	77	59	64	71	73	72	69	69

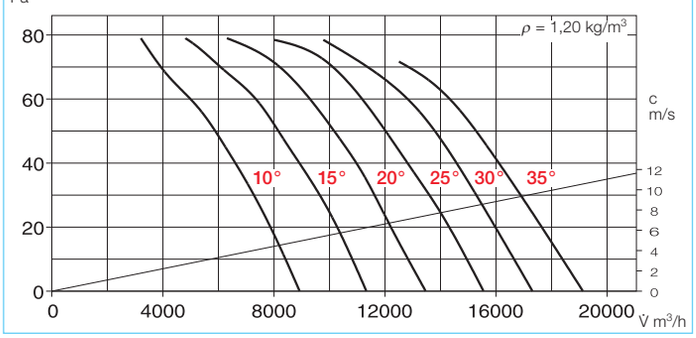

Accessories for AVD RK Description see page 230 on

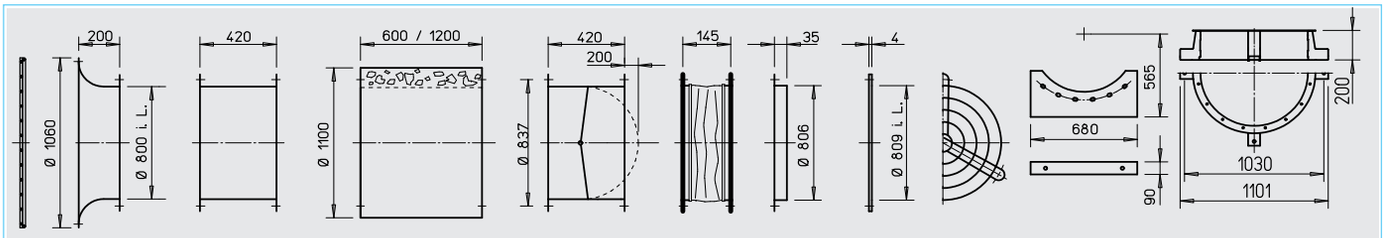

Bell mount + guard	Extension duct	Circular attenuators	Automatic back-draught shutter	Flang. flex. connector	Counter-flange	Flat flange	Guard	2 mounting feet	Mounting ring for vertical mounting
ASD-SGD 800	**VR 800**	**RSD 800/..**	**RVS 800** a)	**STS 800** b)	**FR 800**	**FF 800**	**SG 800**	**1 x MK 800** (= 2 pcs.)	**MRV 800**
No. 1424	No. 1412		No. 2602	No. 1233	No. 1198	No. 4951	No. 1245	No. 1373	No. 1744

a) For motorised shutters see accessory page

b) Models for ex-proof fans see below

Electronic controller, stepless Frequency inverter with Sine filter		Vibration dampers nominal size SDD / SDZ	
Model	Ref. no.	**Model**	Ref. no.
FU-BS 10 2)	5462	**..2/..2**	1453/1455
FU-BS 14 2)	5463		
ESD 5 2)	0501	**..2/..2**	1453/1455
—	—	**..2/..2**	1453/1455
not permitted		**..2/..2**	1453/1455
not permitted		**..2/..2**	1453/1455
not permitted		**..2/..2**	1453/1455
not permitted		**..2/..2**	1453/1455
not permitted		**..2/..2**	1453/1455

4) and 5) full motor protection, see description "Motor protection".

Information	Page
Techn. description	140
Selection chart	141
Information for planning	10 on

Made to order designs
Alternative voltages, protection classes, air flow direction, air flow temperature, acid protection and cast aluminium impellers are available on request.

Note the technical information on page 15 on.

Other accessories	Page
b) **Accessories for explosion proof fans**	
Flanged flexible connector Type STS 800 Ex Ref. no. 2511	
Attenuators	434 on
Shutter and grilles	487 on
Speed controllers and switches	525 on

AVD DK

AVD RK

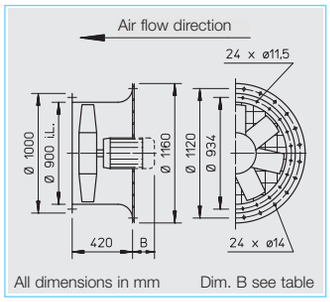

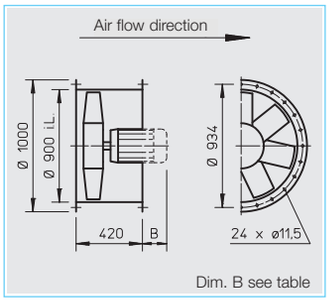

■ Specification for all models

☐ Casing
With motor support manufactured from galvanised sheet steel.

☐ Impeller
Highly efficient, profiled blade impeller, dynamically balanced and manufactured from impact resistant polymers. Suitable for –30 to +60 °C. Deviation for ex-models.

☐ Pitch angle
The impeller blades are adjustable for the optimal coverage of the operating point (except explosion proof). The pitch angle is set at the factory (according to the order) and fixed. The motor allocation takes place using the maximum power pursuant to the information in the table below. The specified pitch angle shown for each motor must not be exceeded.

☐ Motor
Totally enclosed motor protected to IP 55. Maintenance-free and interference-free. Humidity protection of tropicalized windings. Deviation for ex-models.

☐ Motor protection
All models (except pole switching and explosion proof) have thermal contacts or PTC thermistors and according to footnotes in the table to protect through the following full motor protection units:
[4]MSA, Ref. no. 1289
(for PTC thermistor temp. sens)
[5]M4, Ref. no. 1571
All other models have to be protected by a conventional circuit breaker on site.

☐ Electrical connection
Terminal box protected to IP 54 mounted on motor.

☐ Guard
According to DIN EN ISO 13857, hot-dip galvanised, as standard for AVD DK.

☐ Speed control
Partial through voltage reduction, see the “transformer controller” column. Regulated performance curve upon request. Possible allocations of frequency inverters for all types (except pole-switch and ex-proof). The planned use of a frequency inverter without Sine filter must be stated when ordering. This requires a change of fan design and potential additional costs.

☐ Reversed operation
All models are reversible when wired to a reversing switch. For reverse air flow direction allow a loss in performance of approx. 1/3.

☐ Installation
Installation in any position. Ensure that the motor drainage holes face downwards.

☐ Dimensions
Pole-switch and explosion proof models may deviate from the adjacent information. Motor build lengths vary. Note dimension B projection.

☐ Sound levels
The sound power levels are specified through the frequency and as sum levels above the characteristic curves. Deviation for ex-models.

R.P.M.	Air flow volume (FID)	Motor power (nominal)*	Voltage	Power con. nom. volt.*	max. pitch angle	Wiring diagram	max. air flow temp.	Weight net	Model				Dim. B motor projection	Transformer controller for 5 speed pole switch	
									AVD DK incl. guard	Ref. no.	AVD RK	Ref. no.			
min^{-1}	V̇ m³/h	kW	V	A	°	No.	+°C	kg					mm	Model	Ref. no.
Three phase, 50 Hz, squirrel-cage motor, protection to IP 54															
950	37300	3.00*	400/690	6.2*	34	776	40	130	**AVD DK 900/6/..[4]**	5369	**AVD RK 900/6/..[4]**	6985	290	—	—
1445	35030	4.00*	400/690	8.3*	16	776	40	118	**AVD DK 900/4/..[4]**	5370	**AVD RK 900/4/..[4]**	6986	210	—	—
1450	48995	7.50*	400/690	14.5*	27	776	40	142	**AVD DK 900/4/..[4]**	5371	**AVD RK 900/4/..[4]**	6987	325	—	—
1470	57720	11.00*	400/690	20.0*	34	776	40	186	**AVD DK 900/4/..[4]**	5372	**AVD RK 900/4/..[4]**	6988	385	—	—
Two-speed, 3 ph., 400 V, 50 Hz, Y/△ switch, protection to IP 55															
755/930	18390/22660	0.71/1.32*	400/400	2.1/4.0*	19	520	40	90	**AVD DK 900/6/6/..[5]**	5367	**AVD RK 900/6/6/..[5]**	6983	180	**RDS 7[2]**	1578
770/920	25990/31060	1.38/2.37*	400/400	3.9/7.1*	27	520	40	115	**AVD DK 900/6/6/..[5]**	5368	**AVD RK 900/6/6/..[5]**	6984	210	**RDS 11[2]**	1332
Pole-switchable, 2-speed, 3 ph., 50 Hz, protection to IP 54														Pole switch	
700/1435	18270/37450	1.10/4.50*	400/400	2.9/9.6*	18	471	40	120	**AVD DK 900/8/4/..[1]**	5379	**AVD RK 900/8/4/..[1]**	6995	290	**PDA 12[3]**	5081
715/1450	22390/45410	1.80/6.50*	400/400	5.7/14.5*	24	471	40	148	**AVD DK 900/8/4/..[1]**	5380	**AVD RK 900/8/4/..[1]**	6996	325	**PDA 25[3]**	5060
Explosion proof Ex e II, 3 ph., 50 Hz, protection to IP 55, temp. class T1-T3															
700	24470	0.95*	400	2.8*	27	470	40	110	**AVD DK 900/8 Ex/..**	5386	**AVD RK 900/8 Ex/..**	6899	180	not permitted	
725	28470	1.3*	400	3.9*	34	470	40	130	**AVD DK 900/8 Ex/..**	5387	**AVD RK 900/8 Ex/..**	6900	210	not permitted	
950	30550	1.90*	400	4.7*	25	470	40	135	**AVD DK 900/6 Ex/..**	5389	**AVD RK 900/6 Ex/..**	6901	210	not permitted	
960	38040	3.50*	400/690	7.4*	35	498	40	160	**AVD DK 900/6 Ex/..**	5390	**AVD RK 900/6 Ex/..**	6902	290	not permitted	
1450	46630	6.80*	400/690	13.6*	25	498	40	175	**AVD DK 900/4 Ex/..**	5392	**AVD RK 900/4 Ex/..**	6903	325	not permitted	
1465	55240	10.00*	400/690	19.8*	32	498	40	235	**AVD DK 900/4 Ex/..**	5393	**AVD RK 900/4 Ex/..**	6904	385	not permitted	

*) Nominal motor amounts, Ex see info p. 16. [1] Dahlander winding. [2] Incl full motor protection. [3] see switch product page for flush mounted version.

900/4 — R.P.M. = 1450

Frequency		Hz	total	125	250	500	1k	2k	4k	8k
L_{WA}	15°	dB(A)	94	78	80	86	90	90	86	79
L_{WA}	25°	dB(A)	96	80	82	88	92	92	88	81
L_{WA}	35°	dB(A)	98	82	84	90	94	94	90	83

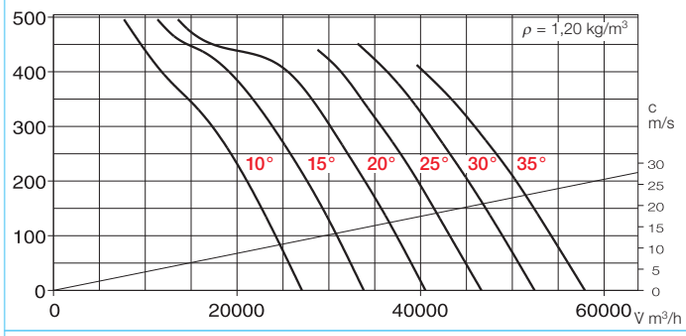

900/6 — R.P.M. = 945

Frequency		Hz	Total	125	250	500	1k	2k	4k	8k
L_{WA}	15°	dB(A)	84	69	70	76	79	79	76	68
L_{WA}	25°	dB(A)	86	71	72	78	81	81	78	70
L_{WA}	35°	dB(A)	88	73	74	80	83	83	80	72

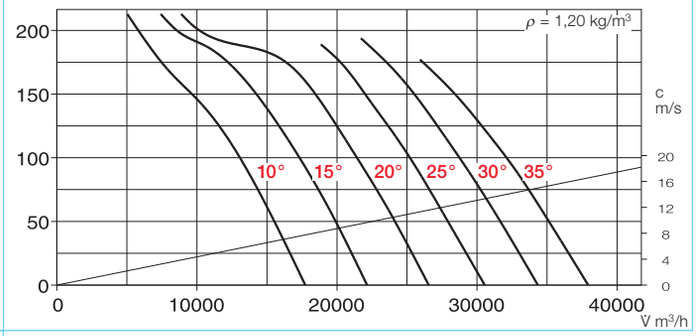

900/8 — R.P.M. = 705

Frequency		Hz	Total	125	250	500	1k	2k	4k	8k
L_{WA}	15°	dB(A)	77	58	64	71	73	72	68	59
L_{WA}	25°	dB(A)	79	60	66	73	75	74	70	61
L_{WA}	35°	dB(A)	81	62	68	75	77	76	72	63

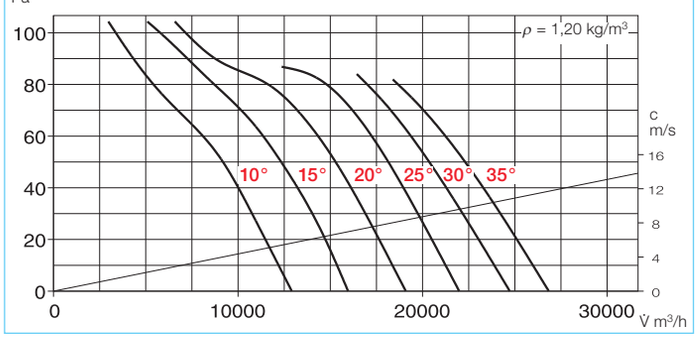

	Electronic controller, stepless Frequency inverter with Sine filter		Vibration dampers nominal size SDD / SDZ	
	Model	Ref. no.	**Model**	Ref. no.
	FU-BS 8,0[2)]	5461	**..2/..2**	1453/1455
	FU-BS 10[2)]	5462	**..3/..3**	1367/1366
	FU-CS 18[2)]	5469	**..3/..3**	1367/1366
	FU-CS 22[2)]	5470	**..3/..3**	1367/1366
	ESD 5[2)]	0501	**..2/..2**	1453/1455
	ESD 11[2)]	0502	**..2/..2**	1453/1455
	—	—	**..2/..2**	1453/1455
	—	—	**..2/..2**	1453/1455
	not permitted		**..2/..2**	1453/1455
	not permitted		**..2/..2**	1453/1455
	not permitted		**..2/..2**	1453/1455
	not permitted		**..2/..2**	1453/1455
	not permitted		**..3/..3**	1367/1366
	not permitted		**..3/..3**	1367/1366

[4)] and [5)] full motor protection, see description "Motor protection".

Accessories for AVD RK Description see page 230 on

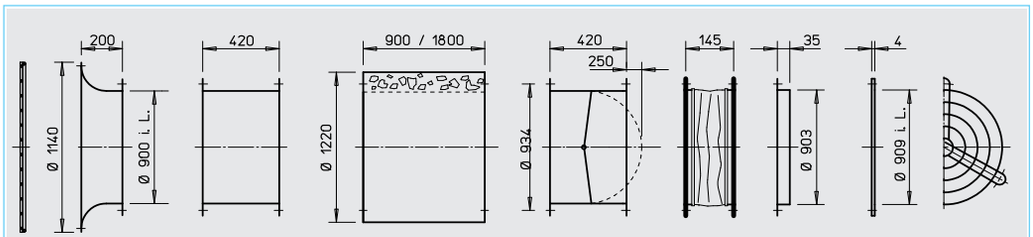

Bell mount + guard **ASD-SGD 900** No. 1309 | Extension duct **VR 900** No. 1311 | Circular attenuators **RSD 900/..** | Automatic back-draught shutter **RVS 900** [a)] Nr. 2603 | Flang. flex. connector **STS 900** [b)] Nr. 1234 | Counter flange **FR 900** Nr. 1199 | Flat flange **FF 900** Nr. 4952 | Guard **SG 900** Nr. 1246

[a)] For motorised shutters see accessory page

[b)] Models for ex-proof fans see below

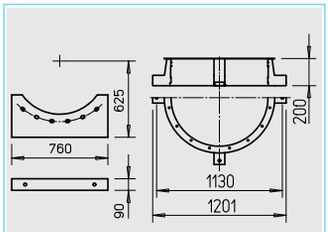

2 mounting feet **1 x MK 900** (= 2 pcs.) No. 1374

Mounting ring for vertical mounting **MRV 900** No. 1745

Information	Page
Techn. description	140
Selection chart	141
Information for planning	10 on

Made to order designs
Alternative voltages, protection classes, air flow direction, air flow temperature, acid protection and cast aluminium impellers are available on request.

Other accessories	Page
[b)] **Accessories for explosion proof fans**	
Flanged flexible connector Type STS 900 Ex Ref. no. 2512	
Attenuators	434 on
Shutter and grilles	487 on
Speed controllers and switches	525 on

AVD DK

AVD RK

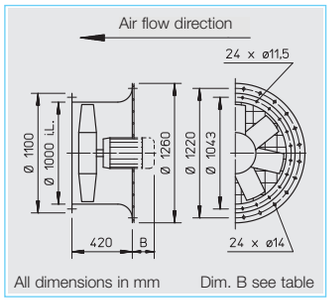

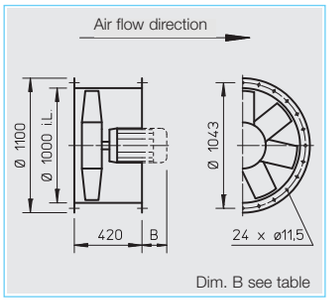

■ Specification for all models

☐ Casing
With motor support manufactured from galvanised sheet steel.

☐ Impeller
Highly efficient, profiled blade impeller, dynamically balanced and manufactured from impact resistant polymers. Suitable for –30 to +60 °C. Deviation for ex-models.

☐ Pitch angle
The impeller blades are adjustable for the optimal coverage of the operating point (except explosion proof). The pitch angle is set at the factory (according to the order) and fixed. The motor allocation takes place using the maximum power pursuant to the information in the table below. The specified pitch angle shown for each motor must not be exceeded.

☐ Motor
Totally enclosed motor protected to IP 55. Maintenance-free and interference-free. Humidity protection of tropicalized windings. Deviation for ex-models.

☐ Motor protection
All models (except pole switching and explosion proof) have thermal contacts or PTC thermistors and according to footnotes in the table to protect through the following full motor protection units:
[4]MSA, Ref. no. 1289
(for PTC thermistor temp. sens)
[5]M4, Ref. no. 1571
All other models have to be protected by a conventional circuit breaker on site.

☐ Electrical connection
Terminal box protected to IP 54 mounted on motor.

☐ Guard
According to DIN EN ISO 13857, hot-dip galvanised, as standard for AVD DK.

☐ Speed control
Partial through voltage reduction, see the “transformer controller” column. Regulated performance curve upon request. Possible allocations of frequency inverters for all types (except pole-switch and ex-proof). The planned use of a frequency inverter without Sine filter must be stated when ordering. This requires a change of fan design and potential additional costs.

☐ Reversed operation
All models are reversible when wired to a reversing switch. For reverse air flow direction allow a loss in performance of approx. 1/3.

☐ Installation
Installation in any position. Ensure that the motor drainage holes face downwards.

☐ Dimensions
Pole-switch and explosion proof models may deviate from the adjacent information. Motor build lengths vary. Note dimension B projection.

☐ Sound levels
The sound power levels are specified through the frequency and as sum levels above the characteristic curves. Deviation for ex-models.

R.P.M.	Air flow volume (FID)	Motor power (nominal)*	Voltage	Power con. nom. volt.*	max. pitch angle	Wiring diagram	max. air flow temp.	Weight net	Model: AVD DK incl. guard	Ref. no.	Model: AVD RK	Ref. no.	Dim. B motor projection	Transformer controller for 5 speed pole switch: Model	Ref. no.
min^{-1}	V m³/h	kW	V	A	°	No.	+°C	kg					mm		
Three phase, 50 Hz, squirrel-cage motor, protection to IP 54															
950	39720	3.0*	400/690	6.2*	23	776	40	120	**AVD DK 1000/6/..[4]**	5398	**AVD RK 1000/6/..[4]**	5573	290	—	—
955	46320	4.0*	400/690	9.2*	29	776	40	127	**AVD DK 1000/6/..[4]**	5399	**AVD RK 1000/6/..[4]**	5574	325	—	—
955	52450	5.5*	400/690	12.4*	35	776	40	145	**AVD DK 1000/6/..[4]**	5400	**AVD RK 1000/6/..[4]**	5575	325	—	—
1470	61460	11.0*	400/690	20.0*	23	776	40	160	**AVD DK 1000/4/..[4]**	5401	**AVD RK 1000/4/..[4]**	5576	385	—	—
1470	71290	15.0*	400/690	26.0*	29	776	40	195	**AVD DK 1000/4/..[4]**	5402	**AVD RK 1000/4/..[4]**	5577	430	—	—
1475	79440	18.5*	400/690	35.0*	34	776	40	210	**AVD DK 1000/4/..[4]**	5403	**AVD RK 1000/4/..[4]**	5578	465	—	—
Pole-switchable, 2-speed, 3 ph., 50 Hz, protection to IP 54														Pole switch	
715/1440	27410/55210	2.2/9.0*	400/400	7.2/19.0*	20	471	40	165	**AVD DK 1000/8/4/..[1]**	5407	**AVD RK 1000/8/4/..[1]**	5582	385	**PDA 25[3]**	5060
715/1445	32325/65330	3.0/12.0*	400/400	9.4/25.0*	26	471	40	190	**AVD DK 1000/8/4/..[1]**	5408	**AVD RK 1000/8/4/..[1]**	5583	415	**PDA 63[3]**	1283
Explosion proof Ex e II, 3 ph., 50 Hz, protection to IP 55, temp. class T1-T3															
955	43180	3.5*	400/690	7.4*	26	498	40	130	**AVD DK 1000/6 Ex/..**	5415	**AVD RK 1000/6 Ex/..**	5590	325	not permitted	
960	52730	6.6*	400/690	13.4*	35	498	40	155	**AVD DK 1000/6 Ex/..**	5416	**AVD RK 1000/6 Ex/..**	5591	400	not permitted	
1480	70160	15.0*	400/690	27.5*	28	498	40	200	**AVD DK 1000/4 Ex/..**	5417	**AVD RK 1000/4 Ex/..**	5592	430	not permitted	
1470	77600	17.5*	400/690	33.0*	33	498	40	225	**AVD DK 1000/4 Ex/..**	5418	**AVD RK 1000/4 Ex/..**	5593	470	not permitted	

*) Nominal motor amounts, Ex see info p. 16. 1) Dahlander winding. 2) Incl full motor protection. 3) see switch product page for flush mounted version.

1000/4 — R.P.M. = 1450

Frequency		Hz	Total	125	250	500	1k	2k	4k	8k
L_{WA}	15 °	dB(A)	98	82	83	89	93	93	90	83
L_{WA}	25 °	dB(A)	100	84	85	91	95	95	92	85
L_{WA}	35 °	dB(A)	102	86	87	93	97	97	94	87

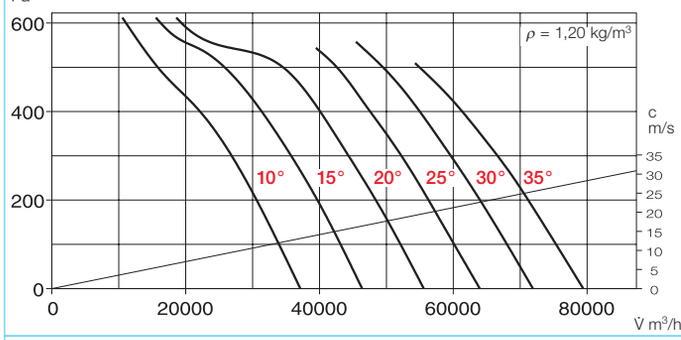

1000/6 — R.P.M. = 950

Frequency		Hz	Total	125	250	500	1k	2k	4k	8k
L_{WA}	15 °	dB(A)	87	67	74	81	83	82	78	69
L_{WA}	25 °	dB(A)	89	69	76	83	85	84	80	71
L_{WA}	35 °	dB(A)	91	71	78	85	87	86	82	73

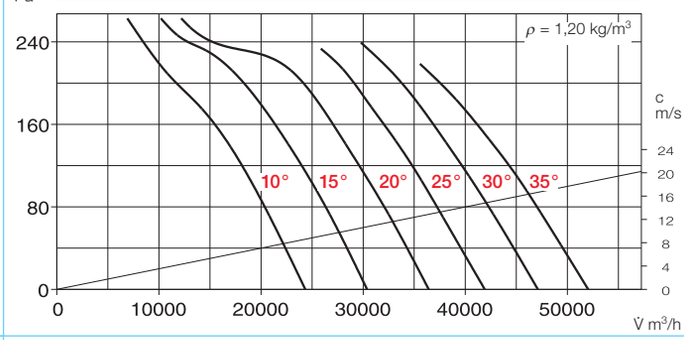

1000/8 — R.P.M. = 725

Frequency		Hz	total	125	250	500	1k	2k	4k	8k
L_{WA}	15 °	dB(A)	80	60	68	74	76	74	69	58
L_{WA}	25 °	dB(A)	82	62	70	76	78	76	71	60
L_{WA}	35 °	dB(A)	84	64	72	78	80	78	73	62

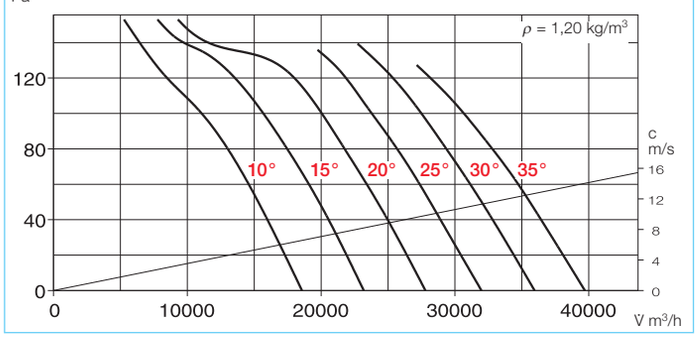

	Electronic controller, stepless Frequency inverter with Sine filter		Vibration dampers nominal size SDD / SDZ	
	Model	Ref. no.	**Model**	Ref. no.
	FU-BS 8,0[2)]	5461	**..2/..2**	1453/1455
	FU-BS 10,0[2)]	5462	**..2/..2**	1453/1455
	FU-BS 10,0[2)]	5462	**..2/..2**	1453/1455
	FU-CS 22[2)]	5470	**..3/..3**	1367/1366
	FU-CS 32[2)]	5471	**..3/..3**	1367/1366
	FU-CS 40[2)]	5472	**..3/..3**	1367/1366
	—	—	**..3/..3**	1367/1366
	—	—	**..3/..3**	1367/1366
	not permitted		**..2/..2**	1453/1455
	not permitted		**..2/..2**	1453/1455
	not permitted		**..3/..3**	1367/1366
	not permitted		**..3/..3**	1367/1366

[4)] and [5)] full motor protection, see description "Motor protection".

Accessories for AVD RK Description see page 230 on

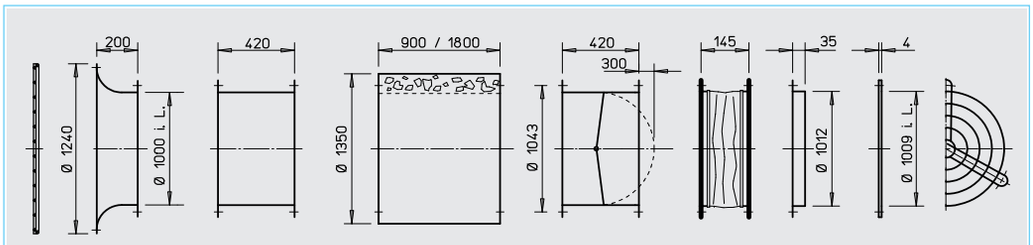

Bell mount + guard **ASD-SGD 1000** No. 1310

Extension duct **VR 1000** No. 1312

Circular attenuators **RSD 1000/..**

Automatic backdraught shutter **RVS 1000** [a)] Nr. 2604

Flang. flex. connector **STS 1000** [b)] Nr. 1235

Counter flange **FR 1000** Nr. 1210

Flat flange **FF 1000** Nr. 4953

Guard **SG 1000** Nr. 1290

[a)] For motorised shutters see accessory page

[b)] Models for ex-proof fans see below

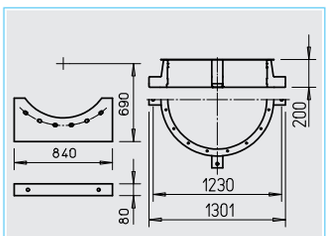

2 Mounting feet **1 x MK 1000** (= 2 pcs.) No. 1375

Mounting ring for vertical mounting **MRV 1000** No. 1749

Information	Page
Techn. description	140
Selection chart	141
Information for planning	10 on

Made to order designs
Alternative voltages, protection classes, air flow direction, air flow temperature, acid protection and cast aluminium impellers are available on request.

Other accessories	Page
[b)] **Accessories for explosion proof fans**	
Flanged flexible connector Type STS 1000 Ex Ref. no. 2513	
Attenuators	434 on
Shutter and grilles	487 on
Speed controllers and switches	525 on

Helios

Medium-pressure axial fans. High-performance for a variety of areas of application.

With capacities of up to 32 000 m³/h and very high pressures of up to 1400 Pa, the range of medium-pressure axial fans is ideally suited to the requirements of professional ventilation technology. Universal installation possibilities (horizontal and vertical positioning) allow for flexible use in a number of areas of application.

THE NEW AMD / AMW: Innovative axial impeller and a new type of guide wheel.

The well-known and tried-and-tested range with adjustable vanes was enhanced by the AMD / AMW with diameters from 225 to 400 mm with motors with controllable voltages in three-phase and direct current and a fixed pitch angle.

INNOVATIVE

The new, optimally tailored system, consisting of a polymer impeller with perfectly integrated inflow geometry, a new type of guide wheel with maximal pressure recovery and specially coordinated motors ensure an optimal degree of efficiency.

In the AMD/AMW, a product was created that fulfills the maximum physical demands.

ENERGY-EFFICIENT

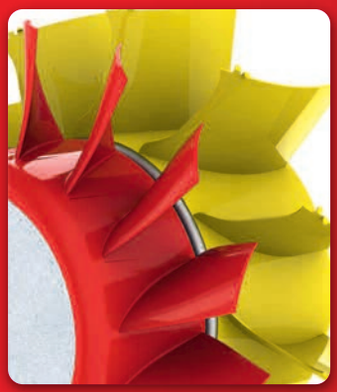

This has enormous benefits:

- High pressures and volumes with the smallest of dimensions.
- Minimal noise.
- Minimal energy costs with maximum performance.
- Maximum pressure recovery thanks to the new guide wheel.
- Very little residual spin.
- Low impact and outlet losses.

UNIVERSAL

The entire AMD range with over 300 types in 12 sizes (NG 315–1120) and volume > 113 000 m³/h is included in a separate catalogue.

Includes B AMD types for machine-based smoke extraction systems (MRA) in temperature classes F300 and F400 as well as assembly kits for two-level series Z or parallel P designs.

This information supplements the "General technical information".

Features
The new AMD/AMWs are a range of medium-pressure fans with a compact design and excellent power density in relation to their size. The new axial impeller with optimised pressure and efficiency achieves an optimal degree of efficiency, high pressure and large volume conveyed in conjunction with the fixed guide wheel.

Casing
Duct casing on both sides with flanges in accordance with DIN 24155 page 3 with integrated guide wheel and motor mount made of galvanised steel. Terminal box on the outside of the duct.

Impeller
Polymer axial impeller with 14 spatially curved vanes and inflow geometry perfectly integrated into the impeller. Maximum pressure recovery in combination with the new guide wheel, a high degree of efficiency, low noise during operation, high corrosion-resistance, low-vibration operation thanks to dynamic balancing in accordance with DIN ISO 1940 T.1 – grade 6.3.

Air flow temperatures
The standard design can be used in the range of -30 to at least +40 °C. See the product page for information. An approval for higher long-term temperatures is possible upon request.

Airflow direction
The airflow direction cannot be changed, but it is defined by the method of installation. The correct motor rotation and airflow direction is marked with an arrow on the fan.

Installation position, mounting, condensation outlets
Given a length of 2.5 times the duct diameter and when placed in the middle of ducting, a corresponding straight section of ducting is required to achieve the stated performance values given unimpeded outflow of air (Figure 1). The ideal inflow of the fan is only guaranteed if a suction nozzle with sufficient free suction space or a straight line with the same diameter and length 2.5 times the diameter is placed upstream in the duct construction.

☐ The installation position and fastening should be designed so that the fan is free from deformation and can be securely fastened. AMD/AMW can be installed and operated in any chosen location. When dealing with equipment with condensate drain holes, their location must be chosen carefully.

☐ The fans must not be operated when in contact with water. When installed outdoors, effective weather protection must be ensured.

☐ For operation under difficult conditions, such as high humidity, excessive strain due to climatic, technical and electronic influences, approval for use must be requested and received, as the default design may not be suitable under certain circumstances.

Positioning
The use of vibration dampers is recommended to prevent the transfer of vibrations (accessories SDD, SDZ). Motors with a large construction size can protrude at the back and cause an uneven distribution due to their high weight. An extension tube (VR, accessories) is to be provided to find the centre of gravity!

Installation examples
☐ **Horizontal**

– **Fig. 2**
Free suction, pressure-side operation with an attenuator with an intermediate flange. To reduce the sound pressure on the suction or pressure side, corresponding ducting attenuator can be fitted with an intermediate flange.

– **Fig. 3**
Hanging from the ceiling
Figure 3 shows the typical installation for use as ventilation technology. The installation of AMD/AMW systems on ceilings is possible by way of direct suspension using mounting brackets (MK) and vibration dampers (accessories SDD, SDZ). The ducting casing with flanges on both sides (according to DIN 24155 page 3) is designed for direct installation in the ducting.

☐ **Vertical**

– **Fig. 4**
Integrated in the ducting with attenuator on the intake-side. Mounting on the wall with brackets or through the ceiling. The elements are to be hung separately according to the weight. Do not install the fan with load balancing when making changes. From a construction size of 315, mounting rings MRV are available for fitting the fan vertically. The weight of the fan including the attached accessories must not exceed the load bearing capacity of the MRV.

Fig. 1

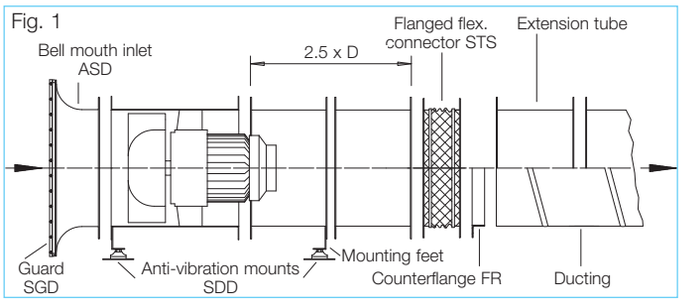

Fig. 2

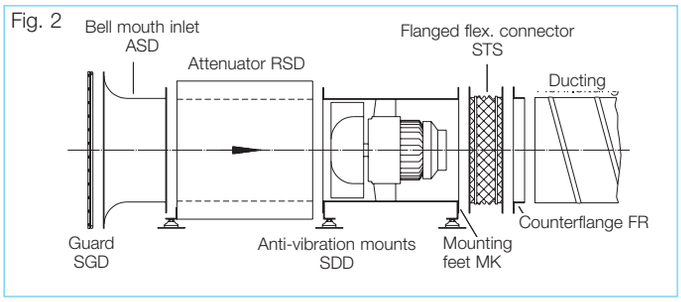

Fig. 3

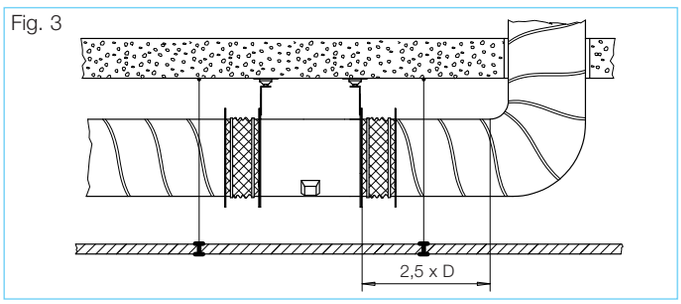

Fig. 4

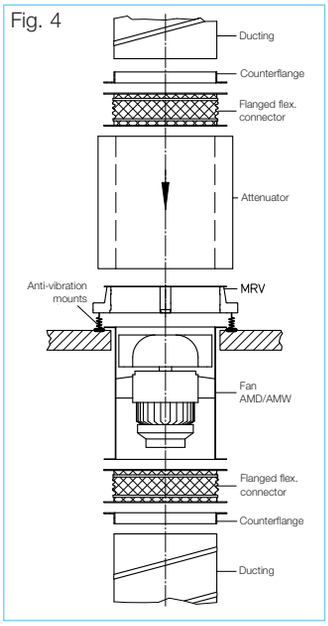

☐ Information	Page
Information for project planning, Acoustics	10 on
General techn. information, speed control	15 on

By combining the parameters of static pressure increase Δp_{fa}, air flow volume $\dot{V}$, speed min^{-1}, sound pressure level dB(A) and impeller diameter DN mm, the following table facilitates the selection of AMD/AMW high-pressure fans.

Diameter	R.P.M.	Sound pressure Intake	Air flow volume $\dot{V}$ m^3/h in relation to static pressure = N / m^2 = freely available pressure												
mm	min^{-1}	L_{PA} dB(A)	(Δp_{fa}) in Pa												
		at 4 m	**0**	**25**	**50**	**75**	**100**	**150**	**200**	**300**	**400**	**500**	**600**	**700**	**800**
225	2800	53	1950	1900	1860	1780	1720	1590	1400						
225	1400	38	950	840	710										
250	2800	56	2620	2550	2480	2410	2340	2180	1980						
250	1400	42	1360	1250	1080										
280	2800	59	3970	3910	3850	3760	3690	3540	3360	3020					
280	1400	44	1930	1810	1650	1450									
315	2800	63	5440	5360	5300	5240	5160	4970	4810	4450	4020				
315	1400	48	2870	2730	2590	2390	2210								
355	2800	68	8610	8540	8470	8390	8310	8140	7970	7600	7180	6760	6260	5490	
355	1400	52	4170	4040	3860	3660	3470	3070							
400	2800	73	12420	12330	12250	12160	12060	11870	11700	11310	10870	10420	9890	9260	8450
400	1400	56	6000	5810	5600	5400	5200	4740	3940						

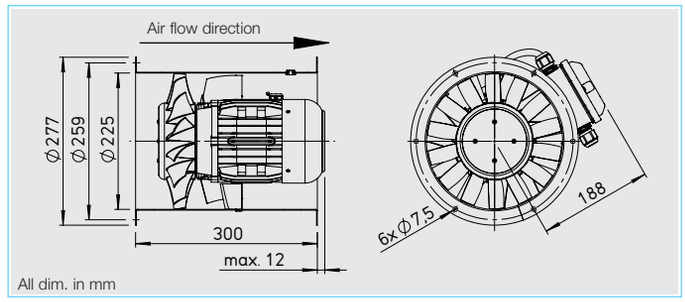

Specification

Casing
Manufactured in galvanised sheet steel with flanges on both sides to DIN 24155, Pt. 3. with fixed guide vanes and motor support.

Impeller / guide vanes
Impeller with 3D profiled blades and integrated inflow geometry made from high quality polymers. Connected to an optimised guide vane made from galvanised steel. Impeller and guide vane efficiency and pressure optimised for high volume flows by means of CFD. Dynamically balanced according to DIN ISO 1940-1. Operating range -30 to +40 °C.

Motor
Direct driven, maintenance free flange motor, totally enclosed with an aluminium casing and cooling fins, protected to IP 54. Sealed for life ball bearings and interference-free. Optional drainage holes made to order (please state installation position). Optional tropicalized protection of windings with humidity protection waterproofing.

Speed control
The voltage-controllable models the current are marked by a value in the "regular power consumption" column of the table below which must be used when selecting a controller (see controller column). The air flow volumes can be seen from the characteristic curves. If the fan is to be controlled by a frequency inverter without a sine filter, this must be stated when ordering. This requires a change of fan design and potential additional costs.

Electrical connection
Terminal box fitted externally on the casing as standard (IP 55).

Installation
Installation in any position. Ensure that motor drainage holes (where used) face downwards.

Motor protection
All models have thermal contacts as standard which must be connected to a full motor protection unit (see table below) for effective motor protection.

Sound levels
Data shown within the performance curves refers to sound power and pressure levels in 4 m free field conditions, for medium operating point intake/exhaust. Sound emission and acoustic information on page 10 on.

Information	Page
Selection chart	183
Information for planning	10 on

Made to order designs
Alternative voltages, frequencies, protection classes, acid protection, high temperatures etc. are available on request.

Other accessories	Page
Installation accessories	230 on
Attenuators	436 on
Switch and control technology	525 on

Type	Ref. no.	R.P.M.	Air flow volume (FID)	Motor power	Voltage	Current standard supply	Current speed controlled	Wiring diagram	Maximum air flow temp. standard supply	Maximum air flow temp. speed controlled	Weight (net) approx.	5 step transformer controller		Frequency inverter with integrated sine filter	
		min^{-1}	$V\ m^3/h$	kW	V	A	A	No.	+°C	+°C	kg	Type	Ref. no.	Type	Ref. no.
1 phase motor, 50 Hz, protection to IP 54															
AMW 225/4	2242	1425	965	0.6	230	0.3	0.3	966.1	60	40	8.7	**MWS 1,5** [1]	1947	–	–
AMW 225/2	2243	2750	1955	0.26	230	1.2	1.4	966.1	60	40	9	**MWS 1,5** [1]	1947	–	–
3 phase motor, 50 Hz, protection to IP 54															
AMD 225/4	2244	1430	960	0.6	400	0.2	0.25	469	60	40	8.3	**RDS 1** [1]	1314	–	–
AMD 225/2	2245	2760	1950	0.25	400	0.6	0.65	469	60	40	8.8	**RDS 1** [1]	1314	–	–

[1] includes full motor protection device

225/2

Frequency*		Hz	Total	125	250	500	1k	2k	4k	8k
L_{WA}	Sound noise	dB(A)	74	45	57	67	69	69	65	58
$L_{PA,4m}$	Sound noise	dB(A)	54	25	37	47	49	49	45	38

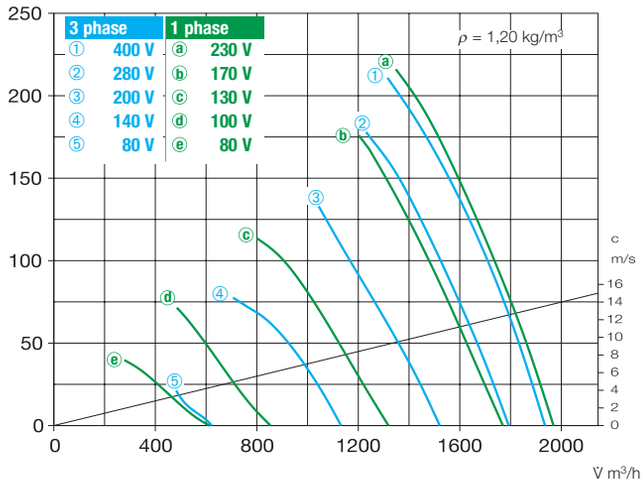

225/4

Frequency*		Hz	Total	125	250	500	1k	2k	4k	8k
L_{WA}	Sound noise	dB(A)	59	35	49	53	54	52	45	35
$L_{PA,4m}$	Sound noise	dB(A)	39	15	29	33	34	32	25	15

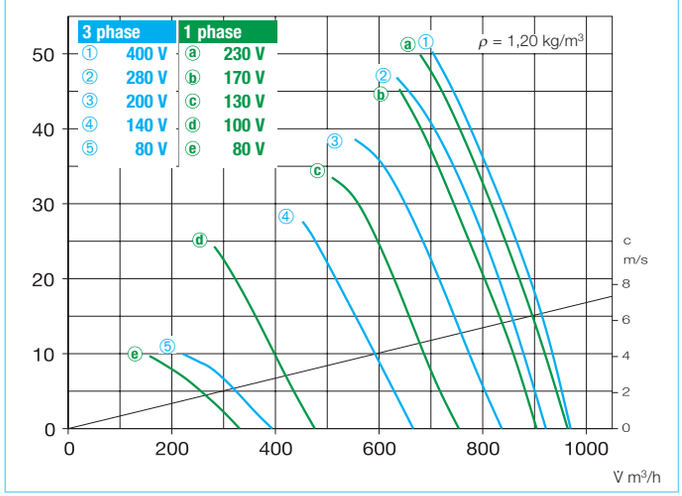

* 3 phase motor sound information. 1 phase motor sound information see www.HeliosSelect.de

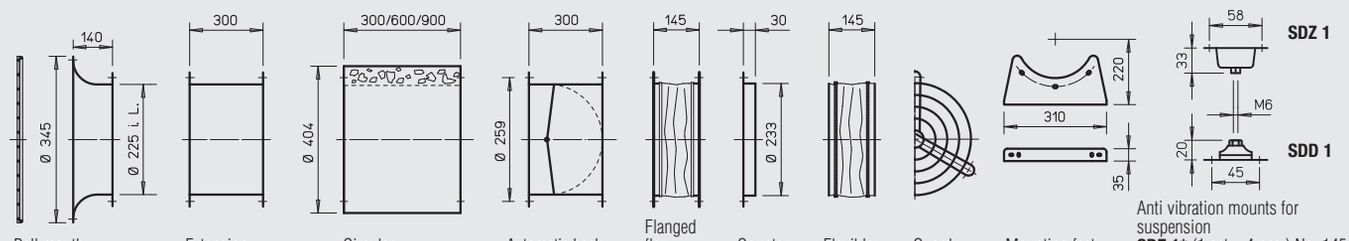

Bell mouth + guard **ASD-SGD 225** No. 1413

Extension duct **VR 225** No. 1401

Circular attenuators **RSD 225/..**

Automatic back-draught shutter **RVS 225** a) No. 2591

Flanged flex. connector **STS 225** No. 1218

Counter-flange **FR 225** No . 1201

Flexible sleeve **FM 225** No . 1671

Guard **SG 225** No . 1215

Mounting feet **MK 225** (1 set = 2 pcs.) No . 1446

Anti vibration mounts for suspension **SDZ 1*** (1 set = 4 pcs.) No. 1454
Anti vibration mounts for compression **SDD 1*** (1 set = 4 pcs.) No. 1452

a) For motorised shutters see accessory pages

* Type allocation see table, last column

	Full motor protection device for connection of thermal contacts		Vibration dampers			
			Compression		**Suspension**	
			Type	Ref. no.	**Type**	Ref. no.
	MW	1579	**SDD 1**	1452	**SDZ 1**	1454
	MW	1579	**SDD 1**	1452	**SDZ 1**	1454
	MD	5849	**SDD 1**	1452	**SDZ 1**	1454
	MD	5849	**SDD 1**	1452	**SDZ 1**	1454

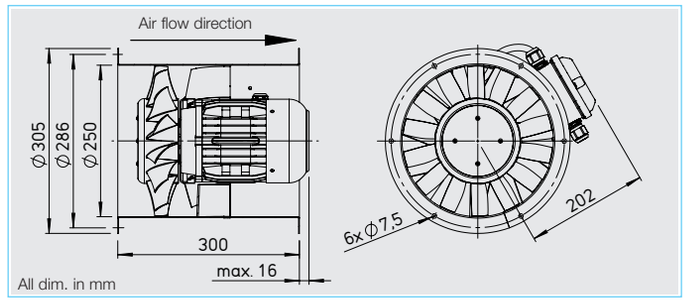

Specification

Casing
Manufactured in galvanised sheet steel with flanges on both sides to DIN 24155, Pt. 3. with fixed guide vanes and motor support.

Impeller / guide vanes
Impeller with 3D profiled blades and integrated inflow geometry made from high quality polymers. Connected to an optimised guide vane made from galvanised steel. Impeller and guide vane efficiency and pressure optimised for high volume flows by means of CFD. Dynamically balanced according to DIN ISO 1940-1. Operating range -30 to +40 °C.

Motor
Direct driven, maintenance free flange motor, totally enclosed with an aluminium casing and cooling fins, protected to IP 54. Sealed for life ball bearings and interference-free. Optional drainage holes made to order (please state installation position). Optional tropicalized protection of windings with humidity protection waterproofing.

Speed control
The voltage-controllable models the current are marked by a value in the "regular power consumption" column of the table below which must be used when selecting a controller (see controller column). The air flow volumes can be seen from the characteristic curves. If the fan is to be controlled by a frequency inverter without a sine filter, this must be stated when ordering. This requires a change of fan design and potential additional costs.

Electrical connection
Terminal box fitted externally on the casing as standard (IP 55).

Installation
Installation in any position. Ensure that motor drainage holes (where used) face downwards.

Motor protection
All models have thermal contacts as standard which must be connected to a full motor protection unit (see table below) for effective motor protection.

Sound levels
Data shown within the performance curves refers to sound power and pressure levels in 4 m free field conditions, for medium operating point intake/exhaust. Sound emission and acoustic information on page 10 on.

Information	Page
Selection chart	183
Information for planning	10 on

Made to order designs
Alternative voltages, frequencies, protection classes, acid protection, high temperatures etc. are available on request.

Other accessories	Page
Installation accessories	230 on
Attenuators	436 on
Switch and control technology	525 on

Type	Ref. no.	R.P.M.	Air flow volume (FID)	Motor power	Voltage	Current standard supply	Current speed controlled	Wiring diagram	Maximum air flow temp. standard supply	Maximum air flow temp. speed controlled	Weight (net) approx.	5 step transformer controller		Frequency inverter with integrated sine filter	
		min^{-1}	V m^3/h	kW	V	A	A	No.	+°C	+°C	kg	Type	Ref. no.	Type	Ref. no.
1 phase motor, 50 Hz, protection to IP 54															
AMW 250/4	2248	1435	1360	0.1	230	0.6	0.6	966.1	60	40	9	**MWS 1,5** [1]	1947	–	–
AMW 250/2	2249	2630	2620	0.4	230	1.9	1.9	966.1	60	40	9.5	**MWS 3** [1]	1948	–	–
3 phase motor, 50 Hz, protection to IP 54															
AMD 250/4	2250	1430	1380	0.08	400	0.3	0.3	469	60	40	9.2	**RDS 1** [1]	1314	–	–
AMD 250/2	2251	2830	2790	0.43	400	1	1	469	60	40	11	**RDS 2** [1]	1315	**FU-BS 2,5**	5459

[1] includes full motor protection device

250/2

Frequency*		Hz	Total	125	250	500	1k	2k	4k	8k
L_{WA}	Sound noise	dB(A)	78	49	61	71	72	72	70	64
$L_{PA,4m}$	Sound noise	dB(A)	58	29	41	51	52	52	50	44

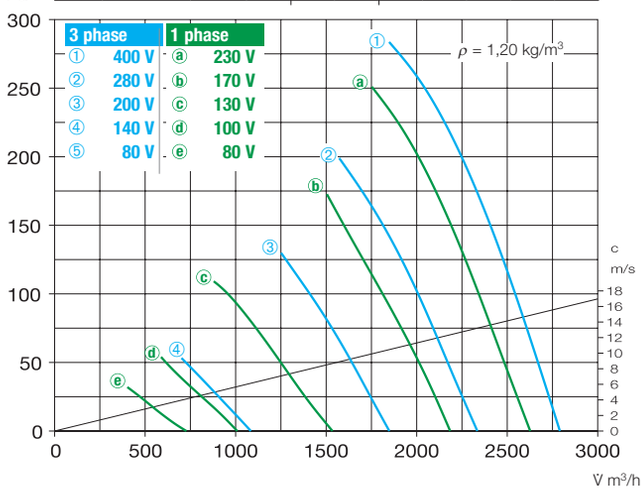

250/4

Frequency*		Hz	Total	125	250	500	1k	2k	4k	8k
L_{WA}	Sound noise	dB(A)	66	45	56	61	62	57	51	40
$L_{PA,4m}$	Sound noise	dB(A)	46	25	36	41	42	37	31	20

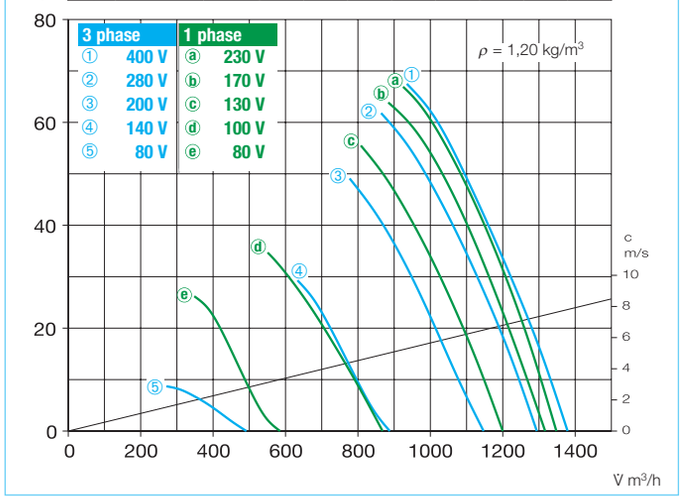

* 3 phase motor sound information. 1 phase motor sound information see www.HeliosSelect.de

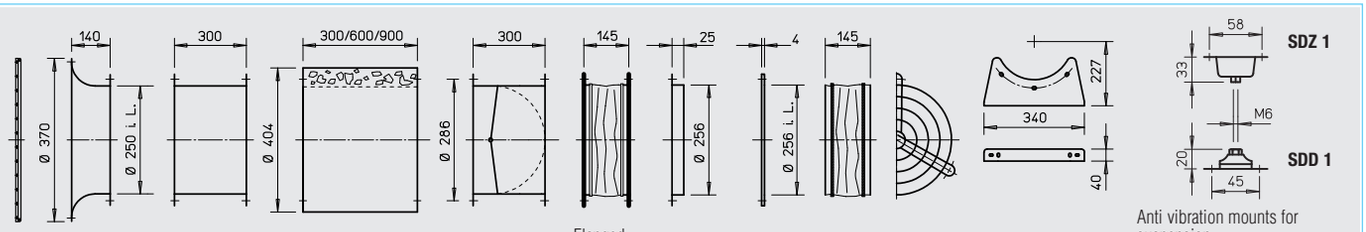

Bell mouth + guard **ASD-SGD 250** No. 1414

Extension duct **VR 250** No. 1402

Circular attenuators **RSD 250/..**

Automatic back-draught shutter **RVS 250** a) No. 2592

Flanged flex. connector **STS 250** No. 1220

Counter-flange **FR 250** No. 1203

Flat flange **FF 250** No. 4941

Flexible sleeve **FM 250** No. 1672

Guard **SG 250** No. 1236

Mounting feet **MK 250** (1 set = 2 pcs.) No. 1447

Anti vibration mounts for suspension **SDZ 1*** (1 set = 4 pcs.) No. 1454
Anti vibration mounts for compression **SDD 1*** (1 set = 4 pcs.) Np. 1452

a) For motorised shutters see accessory pages

* Type allocation see table, last column

	Full motor protection device for connection of thermal contacts		Vibration dampers			
			Compression		**Suspension**	
			Type	Ref. no.	**Type**	Ref. no.
	MW	1579	**SDD 1**	1452	**SDZ 1**	1454
	MW	1579	**SDD 1**	1452	**SDZ 1**	1454
	MD	5849	**SDD 1**	1452	**SDZ 1**	1454
	MD	5849	**SDD 1**	1452	**SDZ 1**	1454

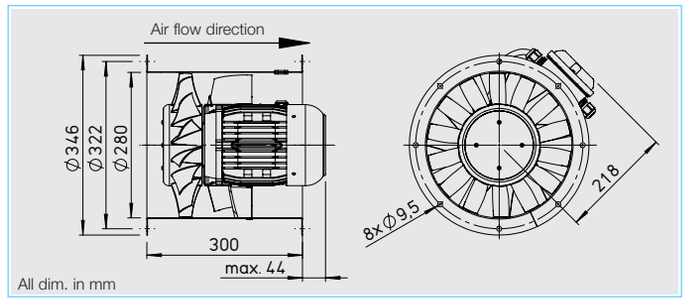

Specification

Casing
Manufactured in galvanised sheet steel with flanges on both sides to DIN 24155, Pt. 3. with fixed guide vanes and motor support.

Impeller / guide vanes
Impeller with 3D profiled blades and integrated inflow geometry made from high quality polymers. Connected to an optimised guide vane made from galvanised steel. Impeller and guide vane efficiency and pressure optimised for high volume flows by means of CFD. Dynamically balanced according to DIN ISO 1940-1. Operating range -30 to +40 °C.

Motor
Direct driven, maintenance free flange motor, totally enclosed with an aluminium casing and cooling fins, protected to IP 54. Sealed for life ball bearings and interference-free. Optional drainage holes made to order (please state installation position). Optional tropicalized protection of windings with humidity protection waterproofing.

Speed control
The voltage-controllable models the current are marked by a value in the "regular power consumption" column of the table below which must be used when selecting a controller (see controller column). The air flow volumes can be seen from the characteristic curves. If the fan is to be controlled by a frequency inverter without a sine filter, this must be stated when ordering. This requires a change of fan design and potential additional costs.

Electrical connection
Terminal box fitted externally on the casing as standard (IP 55).

Installation
Installation in any position. Ensure that motor drainage holes (where used) face downwards.

Motor protection
All models have thermal contacts as standard which must be connected to a full motor protection unit (see table below) for effective motor protection.

Sound levels
Data shown within the performance curves refers to sound power and pressure levels in 4 m free field conditions, for medium operating point intake/exhaust. Sound emission and acoustic information on page 10 on.

Information	Page
Selection chart	183
Information for planning	10 on

Made to order designs
Alternative voltages, frequencies, protection classes, acid protection, high temperatures etc. are available on request.

Other accessories	Page
Installation accessories	230 on
Attenuators	436 on
Switch and control technology	525 on

Type	Ref. no.	R.P.M.	Air flow volume (FID)	Motor power	Voltage	Current standard supply	Current speed controlled	Wiring diagram	Maximum air flow temp. standard supply	Maximum air flow temp. speed controlled	Weight (net) approx.	5 step transformer controller		Frequency inverter with integrated sine filter	
		min^{-1}	$V\ m^3/h$	kW	V	A	A	No.	+°C	+°C	kg	Type	Ref. no.	Type	Ref. no.
1 phase motor, 50 Hz, protection to IP 54															
AMW 280/4	2254	1345	1930	0.1	230	0.5	0.5	966.1	60	40	11.5	**MWS 1,5** [1]	1947	–	–
AMW 280/2	2255	2755	3970	0.7	230	3.2	4.3	976.1	60	40	15.5	**MWS 5** [1]	1949	–	–
3 phase motor, 50 Hz, protection to IP 54															
AMD 280/4	2256	1385	2000	0.1	400	0.3	0.3	469	60	40	10.5	**RDS 1** [1]	1314	–	–
AMD 280/2	2257	2745	3960	0.7	400	1.4	1.5	469	60	40	13.8	**RDS 2** [1]	1315	**FU-BS 2,5**	5459

[1] includes full motor protection device

280/2

	Frequency*	Hz	Total	125	250	500	1k	2k	4k	8k
L_{WA}	Sound noise	dB(A)	80	52	60	72	74	74	72	65
$L_{PA,4m}$	Sound noise	dB(A)	60	32	40	52	54	54	52	45

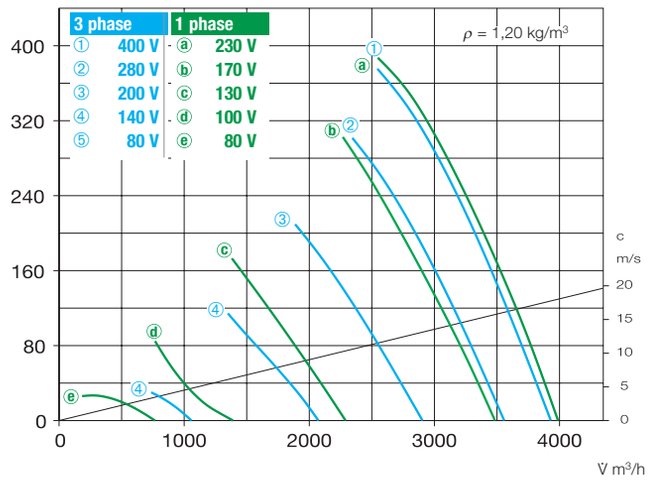

280/4

	Frequency*	Hz	Total	125	250	500	1k	2k	4k	8k
L_{WA}	Sound noise	dB(A)	64	36	52	57	59	58	54	45
$L_{PA,4m}$	Sound noise	dB(A)	44	16	32	37	39	38	34	25

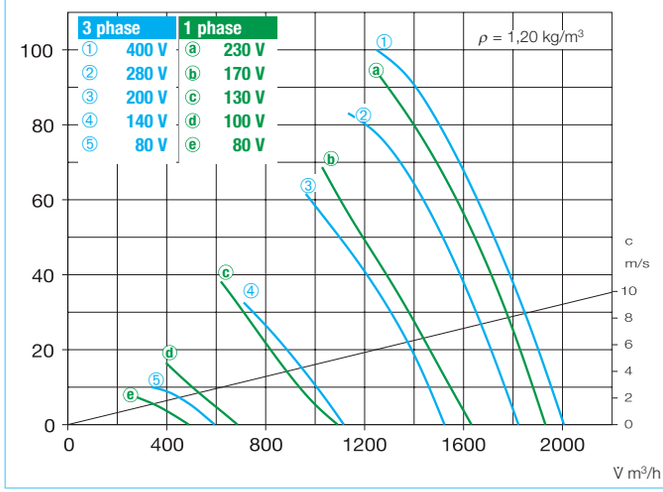

* 3 phase motor sound information. 1 phase motor sound information see www.HeliosSelect.de

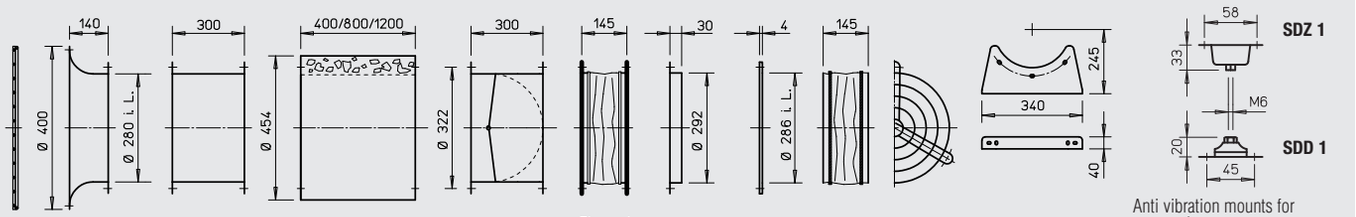

Bell mouth + guard **ASD-SGD 280** No. 1415

Extension duct **VR 280** No. 1403

Circular attenuators **RSD 280/..**

Automatic back-draught shutter **RVS 280** a) No. 2593

Flanged flex. connector **STS 280** No. 1231

Counter-flange **FR 280** No. 1214

Flat flange **FF 280** No. 4942

Flexible sleeve **FM 280** No. 1673

Guard **SG 280** No. 1428

Mounting feet **MK 280** (1 set = 2 pcs.) No. 1447

Anti vibration mounts for suspension **SDZ 1*** (1 set = 4 pcs.) No. 1454
Anti vibration mounts for compression **SDD 1*** (1 set = 4 pcs.) Np. 1452

a) For motorised shutters see accessory pages

* Type allocation see table, last column

	Full motor protection device for connection of thermal contacts		Vibration dampers			
			Compression		**Suspension**	
			Type	Ref. no.	**Type**	Ref. no.
	MW	1579	**SDD 1**	1452	**SDZ 1**	1454
	MW	1579	**SDD 1**	1452	**SDZ 1**	1454
	MD	5849	**SDD 1**	1452	**SDZ 1**	1454
	MD	5849	**SDD 1**	1452	**SDZ 1**	1454

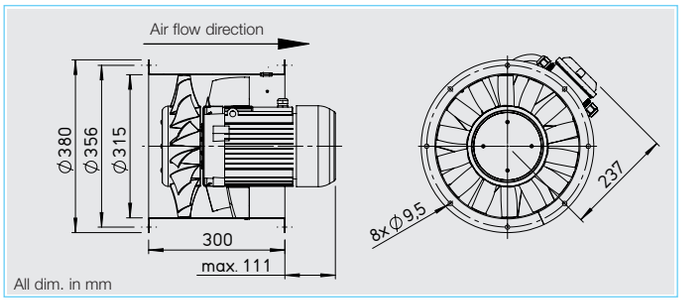

Specification

Casing
Manufactured in galvanised sheet steel with flanges on both sides to DIN 24155, Pt. 3. with fixed guide vanes and motor support.

Impeller / guide vanes
Impeller with 3D profiled blades and integrated inflow geometry made from high quality polymers. Connected to an optimised guide vane made from galvanised steel. Impeller and guide vane efficiency and pressure optimised for high volume flows by means of CFD. Dynamically balanced according to DIN ISO 1940-1. Operating range -30 to +40 °C.

Motor
Direct driven, maintenance free flange motor, totally enclosed with an aluminium casing and cooling fins, protected to IP 54. Sealed for life ball bearings and interference-free. Optional drainage holes made to order (please state installation position). Optional tropicalized protection of windings with humidity protection waterproofing.

Speed control
The voltage-controllable models the current are marked by a value in the "regular power consumption" column of the table below which must be used when selecting a controller (see controller column). The air flow volumes can be seen from the characteristic curves. If the fan is to be controlled by a frequency inverter without a sine filter, this must be stated when ordering. This requires a change of fan design and potential additional costs.

Electrical connection
Terminal box fitted externally on the casing as standard (IP 55).

Installation
Installation in any position. Ensure that motor drainage holes (where used) face downwards.

Motor protection
All models have thermal contacts as standard which must be connected to a full motor protection unit (see table below) for effective motor protection.

Sound levels
Data shown within the performance curves refers to sound power and pressure levels in 4 m free field conditions, for medium operating point intake/exhaust. Sound emission and acoustic information on page 10 on.

Information	Page
Selection chart	183
Information for planning	10 on

Made to order designs
Alternative voltages, frequencies, protection classes, acid protection, high temperatures etc. are available on request.

Other accessories	Page
Installation accessories	230 on
Attenuators	436 on
Switch and control technology	525 on

Type	Ref. no.	R.P.M.	Air flow volume (FID)	Motor power	Voltage	Current standard supply	Current speed controlled	Wiring diagram	Maximum air flow temp. standard supply	Maximum air flow temp. speed controlled	Weight (net) approx.	5 step transformer controller		Frequency inverter with integrated sine filter	
		min^{-1}	V m^3/h	kW	V	A	A	No.	+°C	+°C	kg	Type	Ref. no.	Type	Ref. no.
1 phase motor, 50 Hz, protection to IP 54															
AMW 315/4	2265	1395	2860	0.2	230	1	1.1	966.1	60	40	13.1	**MWS 1,5**[1)]	1947	–	–
3 phase motor, 50 Hz, protection to IP 54															
AMD 315/4	2266	1455	2950	0.2	400	0.6	0.6	469	60	40	12.2	**RDS 1**[1)]	1314	–	–
Two-speed, 3 phase motor, 50 Hz, Y/△ wiring, protection to IP 54															
AMD 315/2/2	2267	2200/2650	7640/8610	0.7/1.1	400/400	1.6/2.5	2.3	520	60	40	18.5	**RDS 4**[1)]	1316	**FU-BS 5,0**	5460

[1)] includes full motor protection device

315/2

Frequency*		Hz	Total	125	250	500	1k	2k	4k	8k
L_{WA}	Sound noise	dB(A)	83	57	67	77	78	78	75	68
$L_{PA,4m}$	Sound noise	dB(A)	63	37	47	57	58	58	55	48

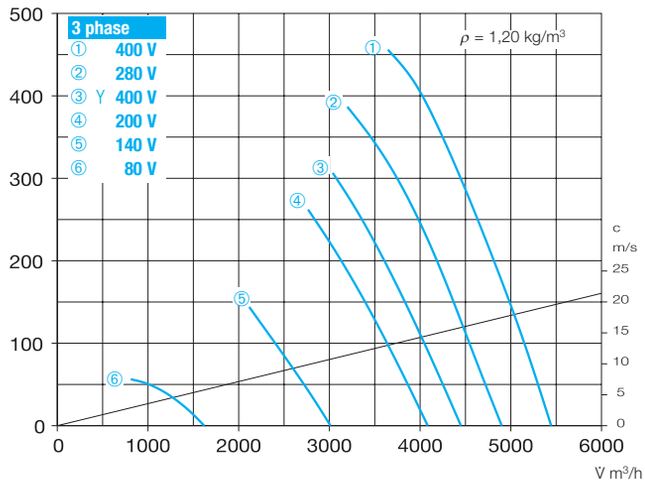

315/4

Frequency*		Hz	Total	125	250	500	1k	2k	4k	8k
L_{WA}	Sound noise	dB(A)	70	42	58	63	64	64	61	53
$L_{PA,4m}$	Sound noise	dB(A)	50	22	38	43	44	44	41	33

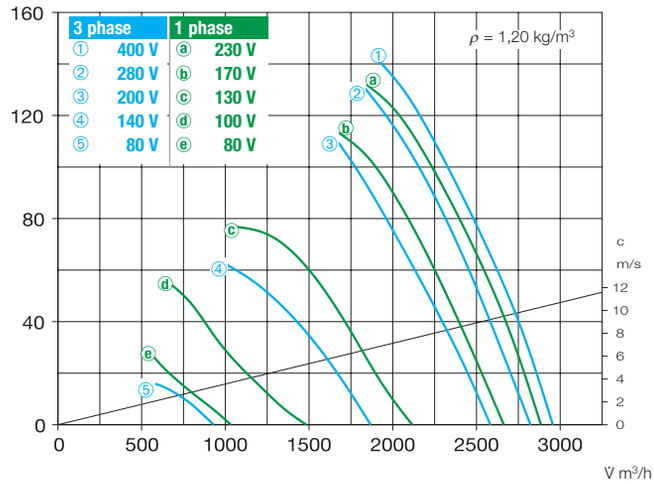

* 3 phase motor sound information. 1 phase motor sound information see www.HeliosSelect.de

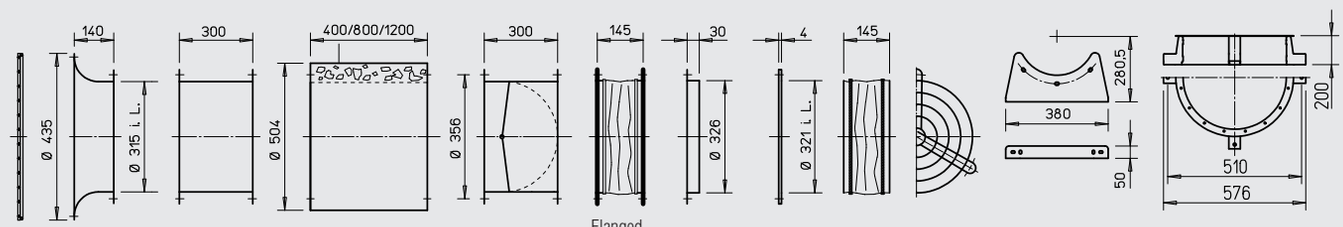

Bell mouth + guard **ASD-SGD 315** No. 1416

Extension duct **VR 315** No. 1404

Circular attenuators **RSD 315/..**

Automatic back-draught shutter **RVS 315** a) No. 2594

Flanged flex. connector **STS 315** No. 1221

Counter-flange **FR 315** No. 1204

Flat flange **FF 315** No. 4943

Flexible sleeve **FM 315** No. 1674

Guard **SG 315** No. 1237

Mounting feet **MK 315** (1 set = 2 pcs.) No. 1448

Mounting ring for vertical mounting **MRV 315** No. 1755

a) For motorised shutters see accessory pages

* Type allocation see table, last column

	Full motor protection device for connection of thermal contacts		Vibration dampers			
			Compression		**Suspension**	
			Type	Ref. no.	**Type**	Ref. no.
	MW	1579	**SDD 1**	1452	**SDZ 1**	1454
	MD	5849	**SDD 1**	1452	**SDZ 1**	1454
	M 4	1571	**SDD 1**	1452	**SDZ 1**	1454

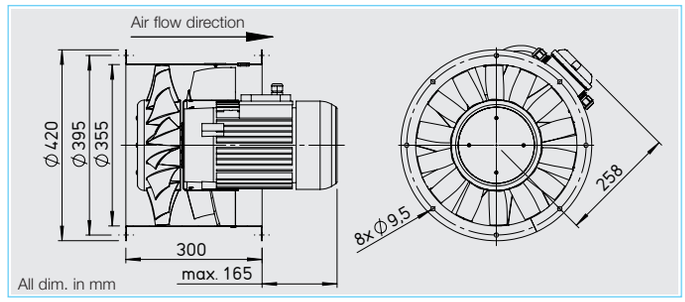

Specification

Casing
Manufactured in galvanised sheet steel with flanges on both sides to DIN 24155, Pt. 3. with fixed guide vanes and motor support.

Impeller / guide vanes
Impeller with 3D profiled blades and integrated inflow geometry made from high quality polymers. Connected to an optimised guide vane made from galvanised steel. Impeller and guide vane efficiency and pressure optimised for high volume flows by means of CFD. Dynamically balanced according to DIN ISO 1940-1. Operating range -30 to +40 °C.

Motor
Direct driven, maintenance free flange motor, totally enclosed with an aluminium casing and cooling fins, protected to IP 54. Sealed for life ball bearings and interference-free. Optional drainage holes made to order (please state installation position). Optional tropicalized protection of windings with humidity protection waterproofing.

Speed control
The voltage-controllable models the current are marked by a value in the "regular power consumption" column of the table below which must be used when selecting a controller (see controller column). The air flow volumes can be seen from the characteristic curves. If the fan is to be controlled by a frequency inverter without a sine filter, this must be stated when ordering. This requires a change of fan design and potential additional costs.

Electrical connection
Terminal box fitted externally on the casing as standard (IP 55).

Installation
Installation in any position. Ensure that motor drainage holes (where used) face downwards.

Motor protection
All models have thermal contacts as standard which must be connected to a full motor protection unit (see table below) for effective motor protection.

Sound levels
Data shown within the performance curves refers to sound power and pressure levels in 4 m free field conditions, for medium operating point intake/exhaust. Sound emission and acoustic information on page 10 on.

Information	Page
Selection chart	183
Information for planning	10 on

Made to order designs
Alternative voltages, frequencies, protection classes, acid protection, high temperatures etc. are available on request.

Other accessories	Page
Installation accessories	230 on
Attenuators	436 on
Switch and control technology	525 on

Type	Ref. no.	R.P.M.	Air flow volume (FID)	Motor power	Voltage	Current standard supply	Current speed controlled	Wiring diagram	Maximum air flow temp. standard supply	Maximum air flow temp. speed controlled	Weight (net) approx.	5 step transformer controller		Frequency inverter with integrated sine filter	
		min^{-1}	V m^3/h	kW	V	A	A	No.	+°C	+°C	kg	Type	Ref. no.	Type	Ref. no.
1 phase motor, 50 Hz, protection to IP 54															
AMW 355/4	2275	1430	4170	0.4	230	1.8	2.4	968.1	60	40	16.9	**MWS 3**[1)]	1948	–	–
3 phase motor, 50 Hz, protection to IP 54															
AMD 355/4	2276	1445	4300	0.35	400	0.9	1.1	469	60	40	15.7	**RDS 2**[1)]	1315	**FU-BS 2,5**	5459
Two-speed, 3 phase motor, 50 Hz, Y/△ wiring, protection to IP 54															
AMD 355/2/2	2277	2200/2775	8610/7640	1.3 /2.3	400/400	3.0/5.4	5.6	520	60	40	30.3	**RDS 7**[1)]	1578	**FU-BS 8,0**	5461

[1)] includes full motor protection device

355/2

Frequency*		Hz	Total	125	250	500	1k	2k	4k	8k
L_{WA}	Sound noise	dB(A)	88	63	71	81	82	83	80	74
$L_{PA,4m}$	Sound noise	dB(A)	68	43	51	61	62	63	60	54

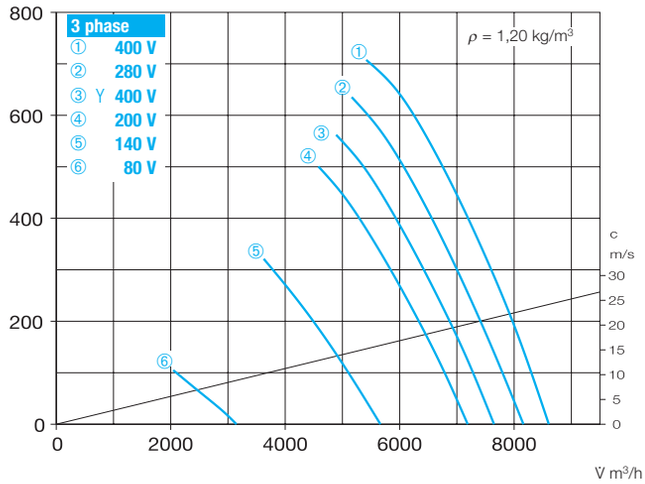

355/4

Frequency*		Hz	Total	125	250	500	1k	2k	4k	8k
L_{WA}	Sound noise	dB(A)	73	48	61	66	67	66	65	56
$L_{PA,4m}$	Sound noise	dB(A)	53	28	41	46	47	46	45	36

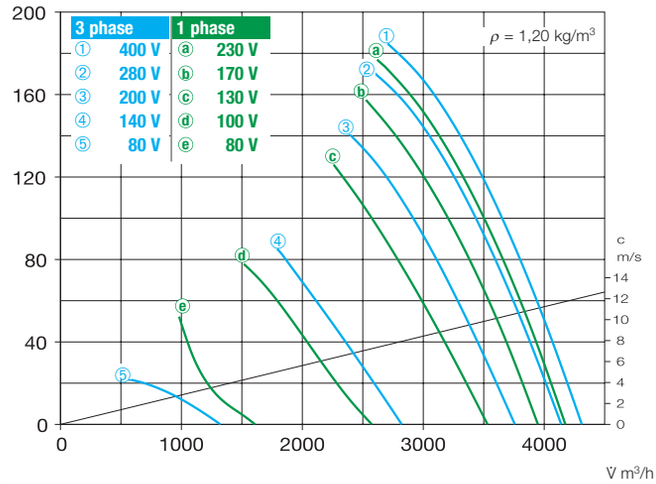

* 3 phase motor sound information. 1 phase motor sound information see www.HeliosSelect.de

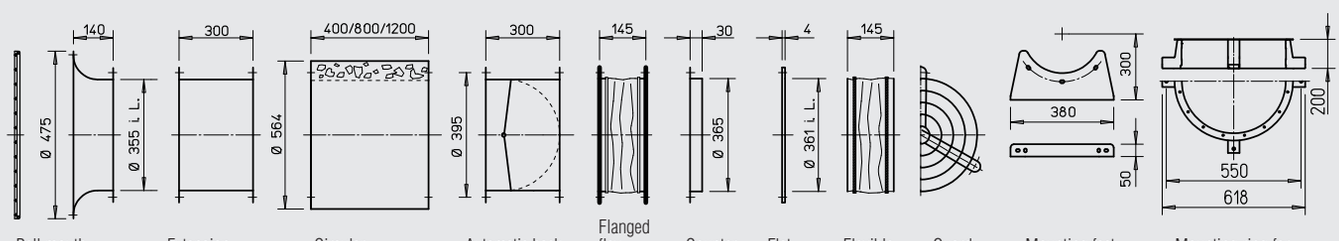

Bell mouth + guard **ASD-SGD 355** No. 1417

Extension duct **VR 355** No. 1405

Circular attenuators **RSD 355/..**

Automatic back-draught shutter **RVS 355** a) No. 2595

Flanged flex. connector **STS 355** No. 1222

Counter-flange **FR 355** No. 1205

Flat flange **FF 355** No. 4944

Flexible sleeve **FM 355** No. 1675

Guard **SG 355** No. 1238

Mounting feet **MK 355** (1 set = 2 pcs.) No. 1448

Mounting ring for vertical mounting **MRV 355** No. 1759

a) For motorised shutters see accessory pages

* Type allocation see table, last column

	Full motor protection device for connection of thermal contacts		Vibration dampers			
			Compression		**Suspension**	
			Type	Ref. no.	**Type**	Ref. no.
	MW	1579	**SDD 1**	1452	**SDZ 1**	1454
	MD	5849	**SDD 1**	1452	**SDZ 1**	1454
	M 4	1571	**SDD 1**	1452	**SDZ 1**	1454

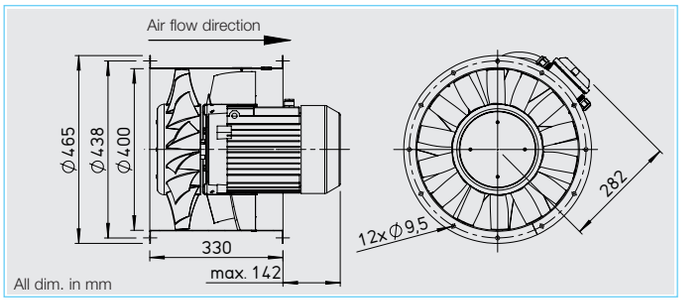

Specification

Casing
Manufactured in galvanised sheet steel with flanges on both sides to DIN 24155, Pt. 3. with fixed guide vanes and motor support.

Impeller / guide vanes
Impeller with 3D profiled blades and integrated inflow geometry made from high quality polymers. Connected to an optimised guide vane made from galvanised steel. Impeller and guide vane efficiency and pressure optimised for high volume flows by means of CFD. Dynamically balanced according to DIN ISO 1940-1. Operating range -30 to +40 °C.

Motor
Direct driven, maintenance free flange motor, totally enclosed with an aluminium casing and cooling fins, protected to IP 54. Sealed for life ball bearings and interference-free. Optional drainage holes made to order (please state installation position). Optional tropicalized protection of windings with humidity protection waterproofing.

Speed control
The voltage-controllable models the current are marked by a value in the “regular power consumption” column of the table below which must be used when selecting a controller (see controller column). The air flow volumes can be seen from the characteristic curves. If the fan is to be controlled by a frequency inverter without a sine filter, this must be stated when ordering. This requires a change of fan design and potential additional costs.

Electrical connection
Terminal box fitted externally on the casing as standard (IP 55).

Installation
Installation in any position. Ensure that motor drainage holes (where used) face downwards.

Motor protection
All models have thermal contacts as standard which must be connected to a full motor protection unit (see table below) for effective motor protection.

Sound levels
Data shown within the performance curves refers to sound power and pressure levels in 4 m free field conditions, for medium operating point intake/exhaust. Sound emission and acoustic information on page 10 on.

Information	Page
Selection chart	183
Information for planning	10 on

Made to order designs
Alternative voltages, frequencies, protection classes, acid protection, high temperatures etc. are available on request.

Other accessories	Page
Installation accessories	230 on
Attenuators	436 on
Switch and control technology	525 on

Type	Ref. no.	R.P.M.	Air flow volume (FID)	Motor power	Voltage	Current standard supply	Current speed controlled	Wiring diagram	Maximum air flow temp. standard supply	Maximum air flow temp. speed controlled	Weight (net) approx.	5 step transformer controller		Frequency inverter with integrated sine filter	
		min^{-1}	$V\ m^3/h$	kW	V	A	A	No.	+°C	+°C	kg	Type	Ref. no.	Type	Ref. no.
1 phase motor, 50 Hz, protection to IP 54															
AMW 400/4	2280	1395	6000	0.6	230	2.6	3.1	967.1	60	40	23.2	**MWS 5[1)]**	1949	–	–
3 phase motor, 50 Hz, protection to IP 54															
AMD 400/4	2281	1420	5980	0.6	400	1.9	2	469	60	40	22	**RDS 4[1)]**	1316	**FU-BS 2,5**	5459
Two-speed, 3 phase motor, 50 Hz, Y/△ wiring, protection to IP 54															
AMD 400/2/2	2282	2280/2780	10880/12430	2.4/4.4	400/400	5.5/9.5	9.5	520	50	30	44.9	**RDS 11[1)]**	1332	**FU-BS 14**	5463

[1)] includes full motor protection device

400/2

Frequency*		Hz	Total	125	250	500	1k	2k	4k	8k
L_{WA}	Sound noise	dB(A)	93	65	74	88	88	88	83	75
$L_{PA,4m}$	Sound noise	dB(A)	73	45	54	68	68	68	63	55

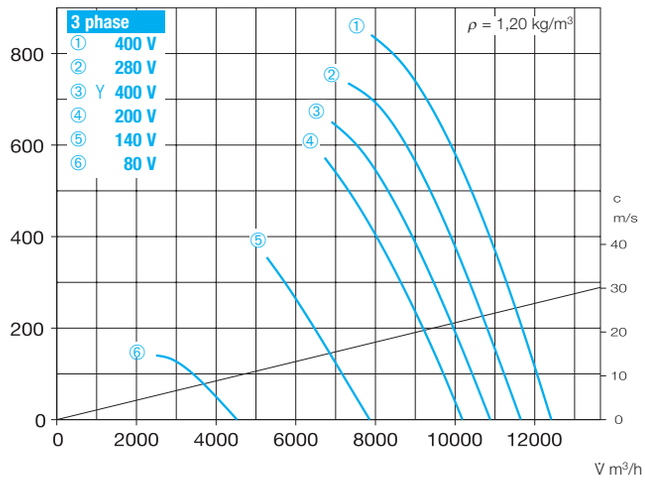

400/4

Frequency*		Hz	Total	125	250	500	1k	2k	4k	8k
L_{WA}	Sound noise	dB(A)	76	55	66	70	70	70	68	58
$L_{PA,4m}$	Sound noise	dB(A)	56	35	46	50	50	50	48	38

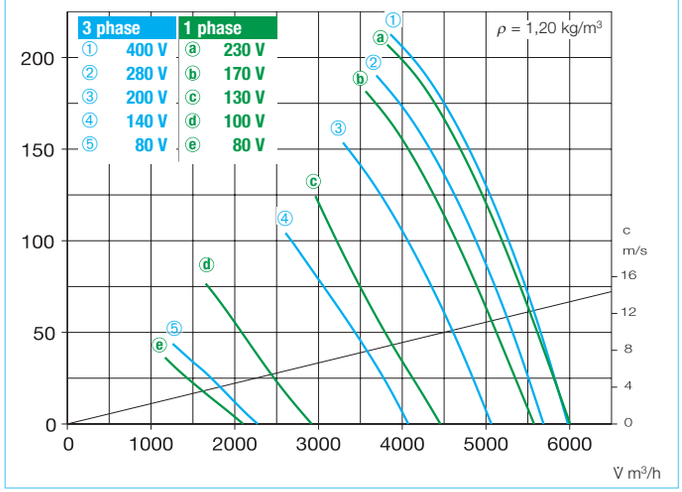

* 3 phase motor sound information. 1 phase motor sound information see www.HeliosSelect.de

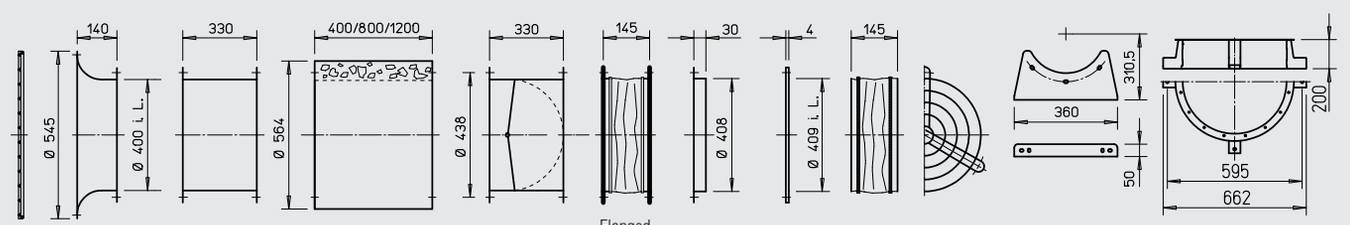

Bell mouth + guard **ASD-SGD 400** No. 1418

Extension duct **VR 400** No. 1406

Circular attenuators **RSD 400/..**

Automatic back-draught shutter **RVS 400** a) No. 2596

Flanged flex. connector **STS 400** No. 1223

Counter-flange **FR 400** No. 1206

Flat flange **FF 400** No. 4945

Flexible sleeve **FM 400** No 1676

Guard **SG 400** No. 1239

Mounting feet **MK 400** (1 set = 2 pcs.) No. 1449

Mounting ring for vertical mounting **MRV 400** No. 1760

a) For motorised shutters see accessory pages

* Type allocation see table, last column

	Full motor protection device for connection of thermal contacts		Vibration dampers			
			Compression		**Suspension**	
			Type	Ref. no.	**Type**	Ref. no.
	MW	1579	**SDD 1**	1452	**SDZ 1**	1454
	MD	5849	**SDD 1**	1452	**SDZ 1**	1454
	M 4	1571	**SDD 1**	1452	**SDZ 1**	1454

Solutions for technical building equipment. Helios TGA.

In addition to the series range, Helios Ventilators offers an extensive product portfolio for technical building equipment (TGA). In addition to the medium-pressure axial fans on the pages below, further ND and various fire gas fan series are available in the temperature classes F300, F400 and F600, as well as impulse fans. Modern control and regulation solutions ensure the efficient and safe operation. With smarter properties, for example, gas warning systems fulfil the strictest demands in terms of safety, performance and energy and cost efficiency.
See separate catalogue or get in touch with local representation for details.

AXIAL AND RADAX® VAR FANS

For areas of application in smoke extraction with conveyance temperatures of 300 °C or 400 °C and 600 °C for 120 minutes (F300, F400, F600) or 40 °C for continuous ventilation operations, the Helios TGA range comprises axial low-pressure, medium-pressure and RADAX® VAR high-pressure in-line fans in ND 280 to 1000 mm with a volume of 2500 – 115 000 m³/h.

40 °C F300 F400 F600

IMPULSE FANS (JET FANS)

impulse fans are used in underground car parks for ventilation and exhaust air extraction and guarantee the extraction of smoke in the case of a fire.

Low-noise and with universal applications, the Helios axial impulse fans are setting benchmarks when it comes to thrust and weight. The centrifugal models have an impressive ultra-flat, compact and light design and are ideal for restricted spaces.

40 °C F300 F400

FIRE GAS ROOF AND RECTANGULAR FANS

Fire gas roof fans are available with ND 315 to 710 mm with volumes of 3700 to 40 000 m³/h. They have DIBt application certificates and are CE-certified.

Fire gas rectangular fans for rectangular ducts and connections are ideally suited to areas of application with conveyor temperatures of 400 °C for 120 minutes (smoke extraction operation).

F400

SMOKE PROTECTION FANS

Smoke protection pressure systems (RDA) and stairway flush ventilation systems (TSA) ensure that stairways, fire-fighting lifts and the like remain free from smoke in order to save lives.

The RDA / TSA concept from Helios has a modular design. With preconfigured packages, the entire system is put together in just a few steps and adapted to the structural conditions and property requirements. This guarantees seamless planning, installation and commissioning, as well as the all-round safe operation of the system.

Casing
- Duct casing with welded-in motor mounting plate and a guide wheel made of sheet steel. Flange pressed on both sides with DIN 24155 page 3 for direct placement of flanges in the middle of ducting.
- Surface protection through powder coating RAL 7015 (grey).

Impeller
- Hubs and vanes made of corrosion-resistant aluminium alloy.
- Dynamically balanced in accordance with DIN ISO 1940-1, grade 6.3 for low-vibration operation.
- Ten vanes with aerodynamic profiles work together with the guide wheel to achieve maximum efficiency and pressure.
- The pitch angle of the vanes can be factory pre-set according to the optimal bespoke operating point.

Motor
- A direct start connection is intended for single-speed fans with a three-phase motor and rated motor power of 3.00 kW, fans with rated motor power of 4.00 kW for the star-delta starting.
- Directly through an efficient IE 2 and IE3 three-phase standard motor. Pole-changeable fans with IEC standard motor. Degree of protection IP 55, insulation class F.

Speed control
Stepless (0–100 %) thanks to the use of a frequency inverter (excluding pole-changeable models). The planned use of a frequency inverter without sinus filter is to be stated when the contract is placed. It triggers a change of the fan design and added costs where applicable.

Motor protrusion
- In some types, the motor extends beyond the casing. Protrusion measurement B in mm is to be observed according to the type table.

Motor protection
- All AMD types have a PTC thermistor for motor protection as standard. This means that effective motor protection is possible using a full motor protection device (type MSA, Ref. no. 1289, accessory) or FU (accessory).

Electrical connection
- Polymer terminal box (degree of protection IP 55) as standard, fitted on the outside of the fan casing.

Ordering data
The desired pitch angle of the vanes must be stated during the order.
Example:
AMD 355/2 1.5 kW 34°

- 34° — Pitch angle
- 1.5 kW — Motor rated power
- 2 — Pole number
- 355 — Impeller diameter
- AMD — Type name

Air flow temperatures
- For ventilation and exhaust air extraction with long-term temperatures from -20 °C to +60 °C. Types for higher conveyor temperatures available upon request.

Airflow direction
- The fans have a pressed design with airflow direction B = above the motor (Fig. 1).

Sound levels
- The sound power values over the frequency and as summation of sound levels for various angles of incidence are stated above the characteristic curves on the product pages.

Installation
- Horizontal and vertical positioning, depending on the installation location.
- The use of vibration dampers (accessory) is recommended in order to prevent the transfer of vibrations.
- **Duct installation (tilting)**
  An extension tube (type VR, accessory) (Figure 2) may need to be fitted in order to prevent overturning when fitting the medium-pressure axial fan with canvas connecting pieces on the intake side and exhaust side (type STS, accessory).
- **Duct installation**
  Arrangement of the mounting brackets (type MK) for horizontal mounting or a mounting ring (type MRV) for vertical mounting with vibration dampers on the fan. Use of vibration dampers for pressure load (Type SDD, accessory) or tensile load (Type SDZ, accessory, when hanging from the ceiling).
  In order to prevent the noise and the transfer of vibrations, canvas connecting pieces (Type STS, accessories) are to be provided on suction and pressure side (Figure 3).
- **Duct installation with attenuators on intake and exhaust sides**
  According to the local circumstances, on-site brackets are necessary to attach the attenuator and to retain the weight. The attenuator on the intake side placed at the inlet, with the attenuator on the pressure side placed at the outlet must both be equipped with canvas connecting pieces (Type STS, accessory, figure 4).
- **Wall mounting (horizontal)**
  On the on-site brackets. Wall entrance with pipe or duct, immurement with mineral wool. Canvas connecting pieces (Type STS, accessory) on the suction and pressure side with extension duct (Type VR, accessory) and protective grille (Type SG, accessory, figure 5).

Fig. 1

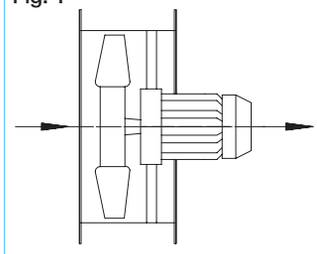

Fig. 2

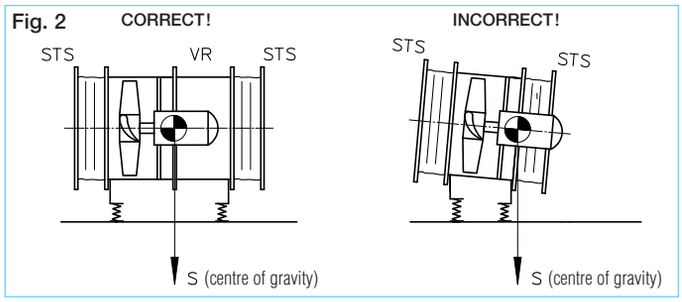

Fig. 3

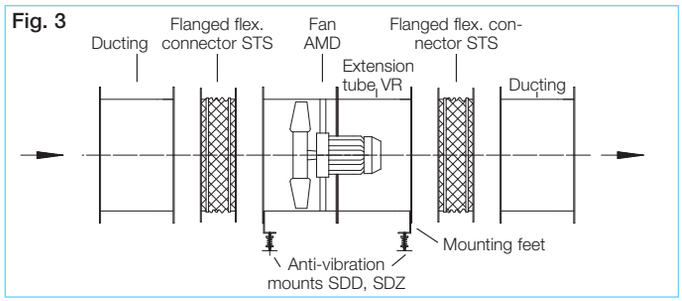

Fig. 4

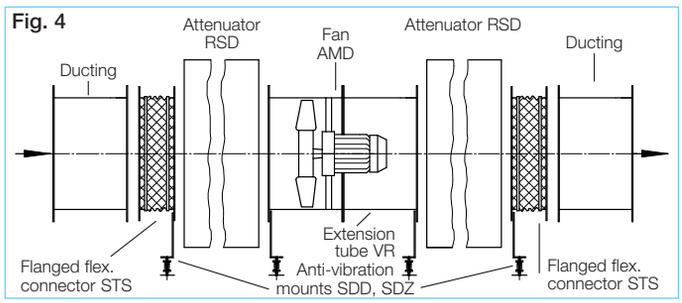

Fig. 5

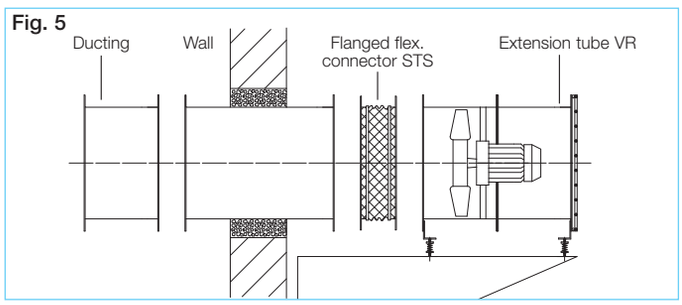

Information	Page
Information for planning	10 on
Installation accessories	230 on
Attenuators	436
Speed controller, pole switch	525 on

Fig. incl. mounting feet (MK, accessories)

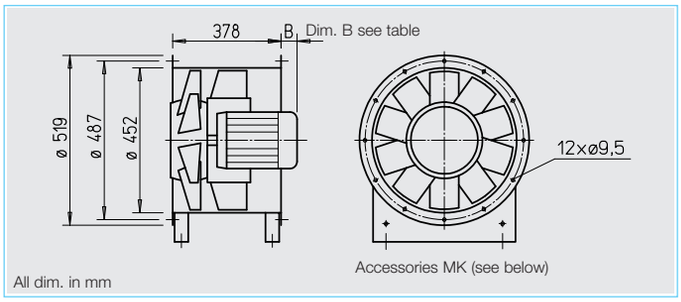

Specification

Casing
Cylindrical duct with welded motor supporting plate and guide vane made of sheet steel. With flanges on both ends (except AVD DK) steel to DIN 24155 PT3. For direct in-line installation in ducting. Surface protection by powder coating RAL 7015 (grey).

Impeller
Hub and blades in corrosion resistant aluminium alloy. Dynamically balanced to DIN ISO 1940-1, class 6.3 for low vibration operation.
Ten aerodynamically profiled blades achieve highest efficiency and pressure rates in cooperation with the guide vane. The pitch angle of the blades is adjustable at standstill and factory set.

Motor
Direct through efficient IE 2 or IE 3 standard three phase motor. Pole-switchable fans with IEC standard motor. Protection to IP 55, insulation class F.

Speed control
Stepless (0-100 %) by use of frequency inverters.
The planned use of a frequency inverter without sine filter must be stated when ordering. This causes a change of the fan execution and if necessary additional costs.

Electrical connection
Standard terminal box (protection to IP 55) from polymer, mounted on the outside of the casing.

Motor protection
All AMD types are equipped with PTC thermistors as motor protection as standard. Effective motor protection is possible by means of full motor protection device (Type MSA, Ref. no. 1289, accessories) or FU (accessories).

Dimensions
For some types, the motor protrudes out of the casing. Overhang dim. B in mm can be seen in the table below.

Sound levels
The sound power values concernig the frequency and as sum levels for different pitch angles are indicated on the product pages above the characteristic curves.

Information	Page
Information for planning	10 on

Made to order designs
Special design with inspection opening (add. price) on request.

Other accessories	Page
Installation accessories	230 on
Attenuators	436 on
Switch and control technology	525 on

Type	Ref. no.	R.P.M.	Air flow volume (FID)	Motor power (output)	Voltage	Current	Dim. B motor overhang	Wiring diagram	Max. air flow temp.	Weight net approx.	Frequency inverter with integrated sine filter		Full motor protection or pole switch	
		min^{-1}	V m³/h	kW	V	A	mm	No.	+°C	kg	Type	Ref. no.	Type	Ref. no.
3 phase motor, 400 V, 50 Hz, protection to IP 55														
AMD 450/4 0,75 kW	3109	1420	8930	0.75	400	1.8	15	796	60	40	**FU-BS 2,5**	5459	**MSA**	1289
AMD 450/4 1,1 kW	3110	1390	10120	1.1	400	2.6	40	796	60	44	**FU-BS 5,0**	5460	**MSA**	1289
AMD 450/2 2,2 kW	3106	2880	10850	2.2	400	4.5	65	796	60	47	**FU-BS 5,0**	5460	**MSA**	1289
AMD 450/2 3 kW	3107	2880	12380	3	400	5.9	105	796	60	54	**FU-BS 8,0**	5461	**MSA**	1289
AMD 450/2 4 kW	3108	2900	14970	4	400*	7.6	155	776	60	57	**FU-BS 8,0**	5461	**MSA**	1289
Pole-switchable, 2-speed, 3 phase motor, Dahlander winding Y/YY, 400 V, 50 Hz, protection to IP 55													Pole switch surface	
AMD 450/4/2 0,65/2,5 kW	3121	1380/2855	5660/11660	0.65/2.5	400	1.9/5.0	40	777	60	61	—	—	**PDA 12** [1]	5081
AMD 450/4/2 0,8/3,1 kW	3111	1380/2860	6200/12380	0.8/3.1	400	2.1/6.1	65	777	60	61	—	—	**PDA 12** [1]	5081
AMD 450/4/2 1,1/4,4 kW	3113	1390/2860	7630/15780	1.1/4.4	400	3.0/8.7	155	777	60	67	—	—	**PDA 12** [1]	5081

The pitch angle should be stated when ordering. [1] Flush mounted version see switch product page. * Y/Δ start-up

450/2

R.P.M. = 2900

Frequency		Hz	total	125	250	500	1k	2k	4k	8k
L_{WA}	10°	dB(A)	100	77	90	95	99	99	94	85
L_{WA}	20°	dB(A)	101	79	91	99	100	100	96	87
L_{WA}	30°	dB(A)	104	81	93	101	103	102	98	89

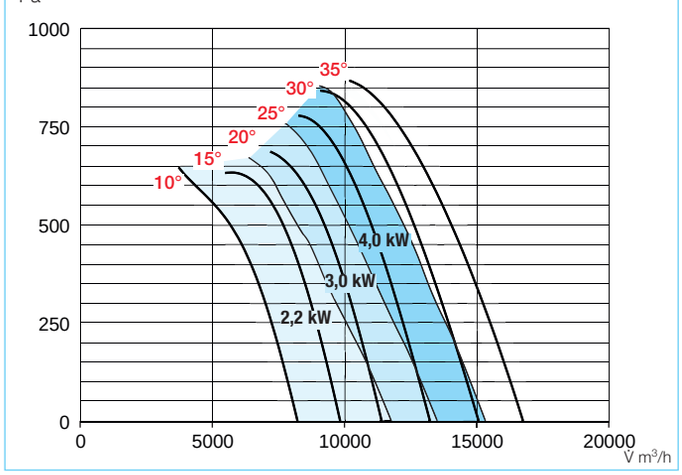

450/4

R.P.M. = 1420

Frequency		Hz	total	125	250	500	1k	2k	4k	8k
L_{WA}	10°	dB(A)	83	68	78	81	82	80	73	61
L_{WA}	20°	dB(A)	85	69	79	84	84	82	74	63
L_{WA}	30°	dB(A)	86	71	81	83	85	82	76	65

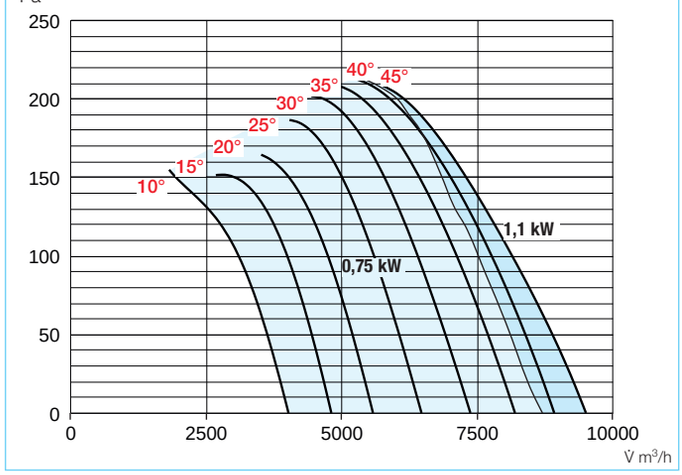

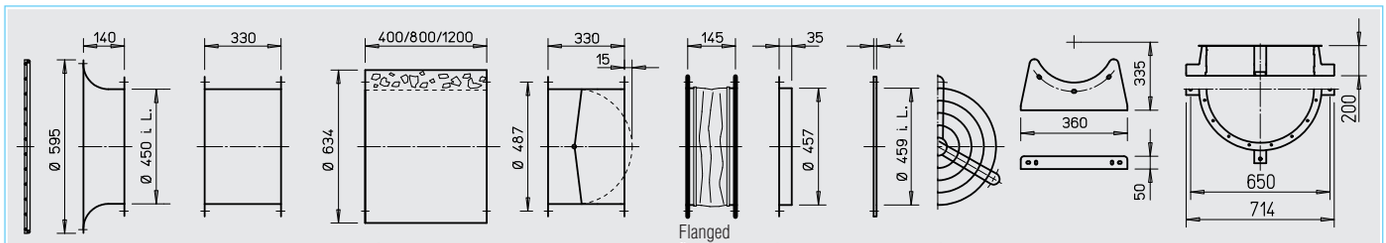

Bell mouth + guard **ASD-SGD 450** No. 1419

Extension duct **VR 450** No. 1407

Circular attenuators **RSD 450/..**

Automatic back-draught shutter **RVS 450** a) No. 2597

Flanged flex. connector **STS 450** No. 1224

Counter-flange **FR 450** No. 1207

Flat flange **FF 450** No. 4946

Guard **SG 450** No. 1239

Mounting feet **MK 450** (1 set = 2 pcs.) No. 1449

Mounting ring for vertical mounting **MRV 450** No. 1761

a) For motorised shutters see accessory pages

	Vibration dampers			
	Compression		**Suspension**	
	Type	Ref. no.	**Type**	Ref. no.
	SDD 1	1452	**SDZ 1**	1454
	SDD 1	1452	**SDZ 1**	1454
	SDD 1	1452	**SDZ 1**	1454
	SDD 1	1452	**SDZ 1**	1454
	SDD 1	1452	**SDZ 1**	1454
	SDD 1	1452	**SDZ 2**	1455
	SDD 1	1452	**SDZ 2**	1455
	SDD 1	1452	**SDZ 2**	1455

Fig. incl. mounting feet (MK, accessories)

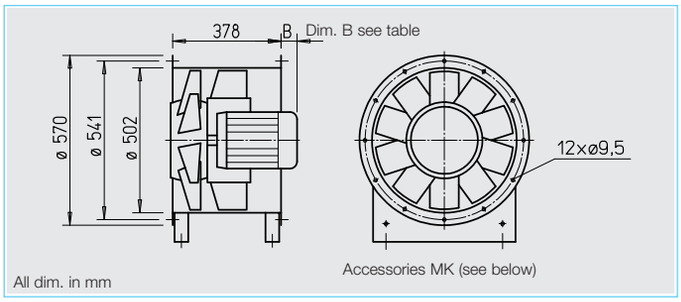

Specification

Casing
Cylindrical duct with welded motor supporting plate and guide vane made of sheet steel. With flanges on both ends (except AVD DK) steel to DIN 24155 PT3. For direct in-line installation in ducting. Surface protection by powder coating RAL 7015 (grey).

Impeller
Hub and blades in corrosion resistant aluminium alloy. Dynamically balanced to DIN ISO 1940-1, class 6.3 for low vibration operation.
Ten aerodynamically profiled blades achieve highest efficiency and pressure rates in cooperation with the guide vane. The pitch angle of the blades is adjustable at standstill and factory set.

Motor
Direct through efficient IE 2 or IE 3 standard three phase motor. Pole-switchable fans with IEC standard motor. Protection to IP 55, insulation class F.

Speed control
Stepless (0-100 %) by use of frequency inverters.
The planned use of a frequency inverter without sine filter must be stated when ordering. This causes a change of the fan execution and if necessary additional costs.

Electrical connection
Standard terminal box (protection to IP 55) from polymer, mounted on the outside of the casing.

Motor protection
All AMD types are equipped with PTC thermistors as motor protection as standard. Effective motor protection is possible by means of full motor protection device (Type MSA, Ref. no. 1289, accessories) or FU (accessories).

Dimensions
For some types, the motor protrudes out of the casing. Overhang dim. B in mm can be seen in the table below.

Sound levels
The sound power values concernig the frequency and as sum levels for different pitch angles are indicated on the product pages above the characteristic curves.

Information	Page
Information for planning	10 on

Made to order designs
Special design with inspection opening (add. price) on request.

Other accessories	Page
Installation accessories	230 on
Attenuators	436 on
Switch and control technology	525 on

Type	Ref. no.	R.P.M.	Air flow volume (FID)	Motor power (output)	Voltage	Current	Dim. B motor overhang	Wiring diagram	Max. air flow temp.	Weight net approx.	Frequency inverter with integrated sine filter		Full motor protection or pole switch	
		min^{-1}	$\dot{V}$ m^3/h	kW	V	A	mm	No.	+°C	kg	Type	Ref. no.	Type	Ref. no.
3 phase motor, 400 V, 50 Hz, protection to IP 55														
AMD 500/4 0,75 kW	3118	1420	9420	0.75	400	1.8	35	796	60	46	**FU-BS 2,5**	5459	**MSA**	1289
AMD 500/4 1,1 kW	3119	1390	11600	1.1	400	2.6	60	796	60	50	**FU-BS 5,0**	5460	**MSA**	1289
AMD 500/4 1,5 kW	3122	1420	13250	1.5	400	3.5	85	796	60	53	**FU-BS 5,0**	5460	**MSA**	1289
AMD 500/2 4 kW	3115	2900	15620	4	400*	7.6	175	776	60	83	**FU-BS 8,0**	5461	**MSA**	1289
AMD 500/2 5,5 kW	3116	2910	17600	5.5	400*	10.4	180	776	60	97	**FU-BS 14**	5463	**MSA**	1289
AMD 500/2 7,5 kW	3117	2940	21570	7.5	400*	13.7	220	776	60	102	**FU-BS 14**	5463	**MSA**	1289
Pole-switchable, 2-speed, 3 phase motor, Dahlander winding Y/YY, 400 V, 50 Hz, protection to IP 55													Pole switch surface	
AMD 500/8/4 0,22/1,0 kW	3275	645/1390	5660/11400	0.22/1.0	400	0.9/2.4	60	777	60	55	—	—	**PDA 12** [1]	5081
AMD 500/8/4 0,3/1,3 kW	3276	645/1390	6250/12630	0.3/1.3	400	1.6/3.3	85	777	60	58	—	—	**PDA 12** [1]	5081
AMD 500/4/2 1,4/5,9 kW	3273	1400/2900	9030/18600	1.4/5.9	400	3.6/11.4	180	777	60	118	—	—	**PDA 12** [1]	5081
AMD 500/4/2 2,0/8,0 kW	3274	1410/2900	10900/22600	2.0/8.0	400	4.7/14.9	220	777	60	129	—	—	**PDA 25**	5060

The pitch angle should be stated when ordering. [1] Flush mounted version see switch product page. [2] Extension duct VR.. required over the motor overhang. * Y/Δ start-up

500/2

R.P.M. = 2930

Frequency		Hz	total	125	250	500	1k	2k	4k	8k
L_{WA}	10°	dB(A)	103	80	93	99	102	100	97	88
L_{WA}	20°	dB(A)	105	82	94	100	104	102	99	90
L_{WA}	30°	dB(A)	107	84	96	104	106	104	101	92

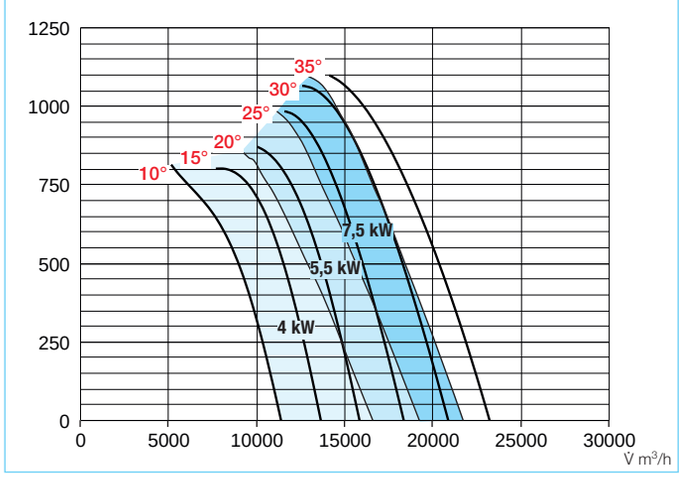

500/4

R.P.M. = 1430

Frequency		Hz	total	125	250	500	1k	2k	4k	8k
L_{WA}	10°	dB(A)	87	71	81	86	86	83	76	64
L_{WA}	20°	dB(A)	88	72	82	86	87	85	77	66
L_{WA}	30°	dB(A)	90	74	84	88	89	87	79	68

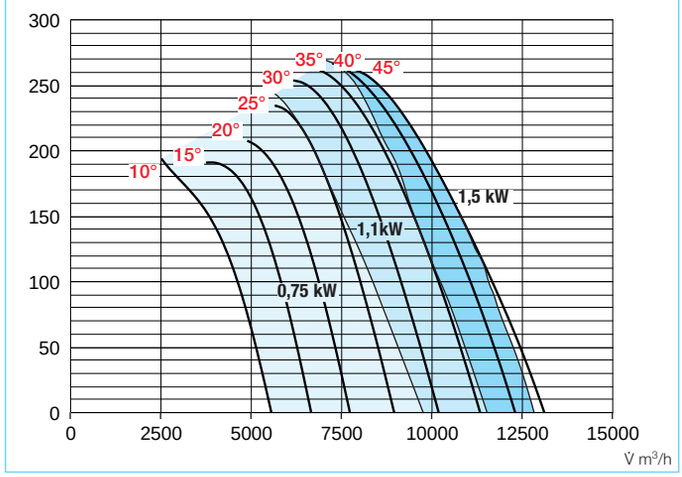

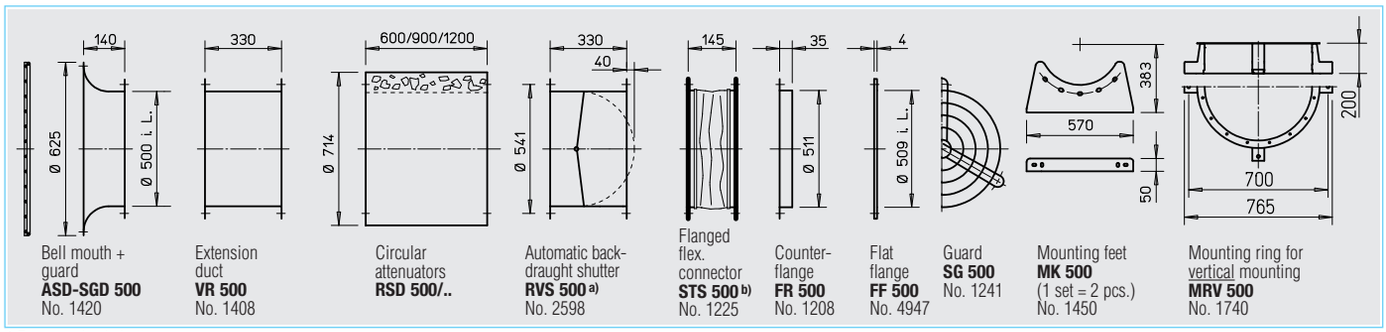

Bell mouth + guard **ASD-SGD 500** No. 1420

Extension duct **VR 500** No. 1408

Circular attenuators **RSD 500/..**

Automatic back-draught shutter **RVS 500** a) No. 2598

Flanged flex. connector **STS 500** b) No. 1225

Counter-flange **FR 500** No. 1208

Flat flange **FF 500** No. 4947

Guard **SG 500** No. 1241

Mounting feet **MK 500** (1 set = 2 pcs.) No. 1450

Mounting ring for vertical mounting **MRV 500** No. 1740

a) For motorised shutters see accessory pages

	Vibration dampers			
	Compression		**Suspension**	
	Type	Ref. no.	**Type**	Ref. no.
	SDD 1	1452	**SDZ 1**	1454
	SDD 1	1452	**SDZ 1**	1454
	SDD 1	1452	**SDZ 1**	1454
	SDD 2	1453	**SDZ 2**	1455
	SDD 2 2)	1453	**SDZ 2** 2)	1455
	SDD 2 2)	1453	**SDZ 2** 2)	1455
	SDD 1	1452	**SDZ 1**	1454
	SDD 1	1452	**SDZ 2**	1455
	SDD 2 2)	1453	**SDZ 2** 2)	1455
	SDD 2 2)	1453	**SDZ 2** 2)	1455

Fig. incl. mounting feet (MK, accessories)

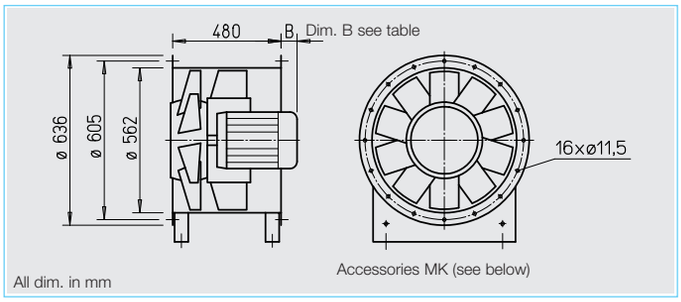

Specification

Casing
Cylindrical duct with welded motor supporting plate and guide vane made of sheet steel. With flanges on both ends (except AVD DK) steel to DIN 24155 PT3. For direct in-line installation in ducting. Surface protection by powder coating RAL 7015 (grey).

Impeller
Hub and blades in corrosion resistant aluminium alloy. Dynamically balanced to DIN ISO 1940-1, class 6.3 for low vibration operation.
Ten aerodynamically profiled blades achieve highest efficiency and pressure rates in cooperation with the guide vane. The pitch angle of the blades is adjustable at standstill and factory set.

Motor
Direct through efficient IE 2 or IE 3 standard three phase motor. Pole-switchable fans with IEC standard motor. Protection to IP 55, insulation class F.

Speed control
Stepless (0-100 %) by use of frequency inverters.
The planned use of a frequency inverter without sine filter must be stated when ordering. This causes a change of the fan execution and if necessary additional costs.

Electrical connection
Standard terminal box (protection to IP 55) from polymer, mounted on the outside of the casing.

Motor protection
All AMD types are equipped with PTC thermistors as motor protection as standard. Effective motor protection is possible by means of full motor protection device (Type MSA, Ref. no. 1289, accessories) or FU (accessories).

Dimensions
For some types, the motor protrudes out of the casing. Overhang dim. B in mm can be seen in the table below.

Sound levels
The sound power values concernig the frequency and as sum levels for different pitch angles are indicated on the product pages above the characteristic curves.

Information	Page
Information for planning	10 on

Made to order designs
Special design with inspection opening (add. price) on request.

Other accessories	Page
Installation accessories	230 on
Attenuators	436 on
Switch and control technology	525 on

Type	Ref. no.	R.P.M.	Air flow volume (FID)	Motor power (output)	Voltage	Current	Dim. B motor overhang	Wiring diagram	Max. air flow temp.	Weight net approx.	Frequency inverter with integrated sine filter		Full motor protection or pole switch	
		min⁻¹	V m³/h	kW	V	A	mm	No.	+°C	kg	Type	Ref. no.	Type	Ref. no.
3 phase motor, 400 V, 50 Hz, protection to IP 55														
AMD 560/4 1,1 kW	3281	1390	11870	1.1	400	2.6	0	796	60	61	**FU-BS 5,0**	5460	**MSA**	1289
AMD 560/4 1,5 kW	3282	1420	14750	1.5	400	3.5	0	796	60	64	**FU-BS 5,0**	5460	**MSA**	1289
AMD 560/4 2,2 kW	3285	1440	17600	2.2	400	4.7	40	796	60	74	**FU-BS 5,0**	5460	**MSA**	1289
AMD 560/4 3 kW	3286	1440	19520	3	400	6,2	40	796	60	80	**FU-BS 8,0**	5461	**MSA**	1289
AMD 560/2 7,5 kW	3279	2940	22000	7.5	400*	13.7	100	776	60	123	**FU-BS 14**	5463	**MSA**	1289
Pole-switchable, 2-speed, 3 phase motor, Dahlander winding Y/YY, 400 V, 50 Hz, protection to IP 55													Pole switch surface	
AMD 560/8/4 0,55/2,0 kW	3272	680/1410	8150/16500	0.55/2.0	400	2.0/4.5	0	777	60	79	—	—	**PDA 12** [1]	5081
AMD 560/8/4 0,65/2,4 kW	3290	680/1410	8740/18160	0.65/2.4	400	2.5/5.5	40	777	60	79	—	—	**PDA 12** [1]	5081
AMD 560/4/2 2,0/8,0 kW	3287	1410/2900	11280/23150	2.0/8.0	400	4.7/14.9	100	777	60	149	—	—	**PDA 25**	5060

The pitch angle should be stated when ordering. [1] Flush mounted version see switch product page. * Y/Δ start-up

560/2

R.P.M. = 2930

Frequency		Hz	total	125	250	500	1k	2k	4k	8k
L_{WA}	10°	dB(A)	107	84	96	104	106	105	101	91
L_{WA}	20°	dB(A)	108	85	97	105	107	105	102	93
L_{WA}	30°	dB(A)	111	87	100	107	110	109	105	95

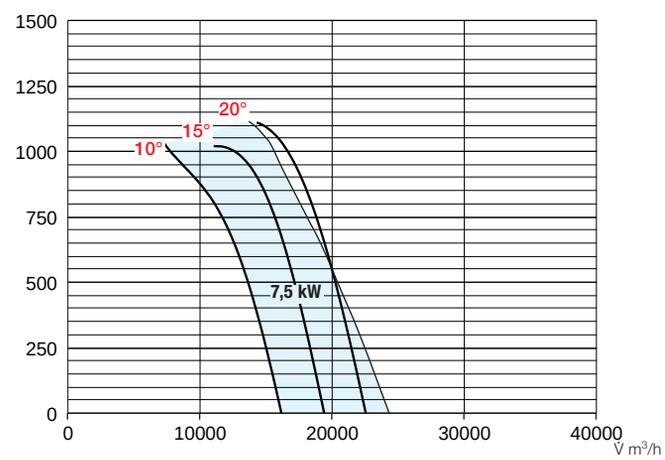

560/4

R.P.M. = 1440

Frequency		Hz	total	125	250	500	1k	2k	4k	8k
L_{WA}	10°	dB(A)	90	74	84	89	89	87	79	68
L_{WA}	20°	dB(A)	92	76	85	91	91	88	81	69
L_{WA}	30°	dB(A)	93	77	87	91	92	90	82	71

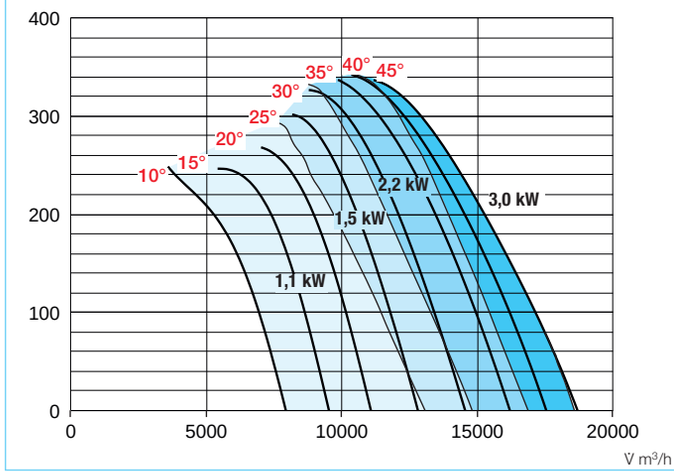

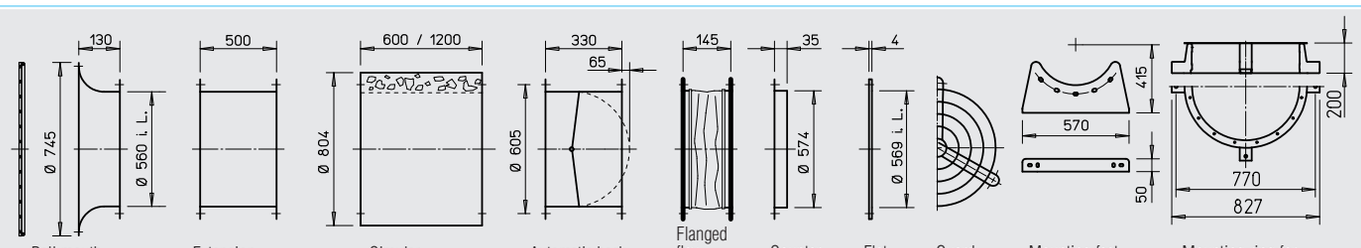

Bell mouth + guard **ASD-SGD 560** No. 1421

Extension duct **VR 560** No. 1409

Circular attenuators **RSD 560/..**

Automatic back-draught shutter **RVS 560** a) No. 2599

Flanged flex. connector **STS 560** No. 1226

Counter-flange **FR 560** No. 1209

Flat flange **FF 560** No. 4948

Guard **SG 560** No. 1242

Mounting feet **MK 500 -560** (1 set = 2 pcs.) No. 1450

Mounting ring for vertical mounting **MRV 560** No. 1741

a) For motorised shutters see accessory pages

	Vibration dampers			
	Compression		**Suspension**	
	Type	Ref. no.	**Type**	Ref. no.
	SDD 1	1452	**SDZ 2**	1455
	SDD 1	1452	**SDZ 2**	1455
	SDD 1	1452	**SDZ 2**	1455
	SDD 2	1453	**SDZ 2**	1455
	SDD 2	1453	**SDZ 2**	1455
	SDD 2	1453	**SDZ 2**	1455
	SDD 2	1453	**SDZ 2**	1455
	SDD 2	1453	**SDZ 2**	1455

Fig. incl. mounting feet (MK, accessories)

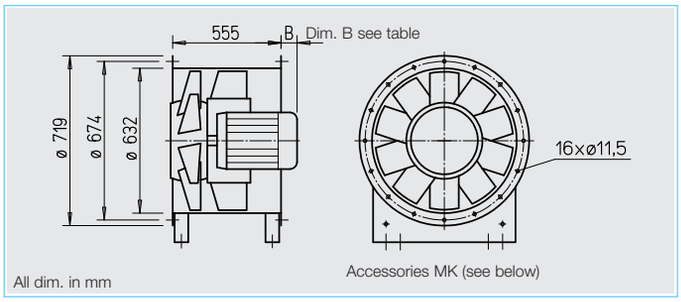

Specification

Casing
Cylindrical duct with welded motor supporting plate and guide vane made of sheet steel. With flanges on both ends (except AVD DK) steel to DIN 24155 PT3. For direct in-line installation in ducting. Surface protection by powder coating RAL 7015 (grey).

Impeller
Hub and blades in corrosion resistant aluminium alloy. Dynamically balanced to DIN ISO 1940-1, class 6.3 for low vibration operation.
Ten aerodynamically profiled blades achieve highest efficiency and pressure rates in cooperation with the guide vane. The pitch angle of the blades is adjustable at standstill and factory set.

Motor
Direct through efficient IE 2 or IE 3 standard three phase motor. Pole-switchable fans with IEC standard motor. Protection to IP 55, insulation class F.

Speed control
Stepless (0-100 %) by use of frequency inverters.
The planned use of a frequency inverter without sine filter must be stated when ordering. This causes a change of the fan execution and if necessary additional costs.

Electrical connection
Standard terminal box (protection to IP 55) from polymer, mounted on the outside of the casing.

Motor protection
All AMD types are equipped with PTC thermistors as motor protection as standard. Effective motor protection is possible by means of full motor protection device (Type MSA, Ref. no. 1289, accessories) or FU (accessories).

Dimensions
For some types, the motor protrudes out of the casing. Overhang dim. B in mm can be seen in the table below.

Sound levels
The sound power values concernig the frequency and as sum levels for different pitch angles are indicated on the product pages above the characteristic curves.

Information	Page
Information for planning	10 on

Made to order designs
Special design with inspection opening (add. price) on request.

Other accessories	Page
Installation accessories	230 on
Attenuators	436 on
Switch and control technology	525 on

Type	Ref. no.	R.P.M.	Air flow volume (FID)	Motor power (output)	Voltage	Current	Dim. B motor overhang	Wiring diagram	Max. air flow temp.	Weight net approx.	Frequency inverter with integrated sine filter		Full motor protection or pole switch	
		min^{-1}	V m^3/h	kW	V	A	mm	No.	+°C	kg	Type	Ref. no.	Type	Ref. no.
3 phase motor, 400 V, 50 Hz, protection to IP 55														
AMD 630/4 1,5 kW	3291	1420	14390	1.5	400	3.5	0	796	60	84	**FU-BS 5,0**	5460	**MSA**	1289
AMD 630/4 2,2 kW	3292	1440	18500	2.2	400	4.7	0	796	60	84	**FU-BS 5,0**	5460	**MSA**	1289
AMD 630/4 3 kW	3293	1440	21400	3.0	400	6.2	0	796	60	99	**FU-BS 8,0**	5461	**MSA**	1289
AMD 630/4 4 kW	3294	1445	25130	4.0	400*	8.1	30	776	60	94	**FU-BS 10**	5462	**MSA**	1289
AMD 630/4 5,5 kW	3295	1450	27700	5.5	400*	11.1	40	776	60	115	**FU-BS 14**	5463	**MSA**	1289
AMD 630/2 11 kW	3376	2940	32000	11.0	400*	20.0	145	776	60	210	—	—	**MSA**	1289
Pole-switchable, 2-speed, 3 phase motor, Dahlander winding Y/YY, 400 V, 50 Hz, protection to IP 55													Pole switch surface	
AMD 630/8/4 0,55/2,0 kW	3297	680/1410	8030/16660	0.55/2.0	400	2.00/4.5	0	777	60	98	—	—	**PDA 12** [1]	5081
AMD 630/8/4 0,9/3,2 kW	3298	680/1420	11000/21750	0.9/3.2	400	3.2/7.1	30	777	60	104	—	—	**PDA 12** [1]	5081
AMD 630/8/4 1,1/4,5 kW	3299	680/1435	13260/26450	1.1/4.5	400	3.6/9.3	40	777	60	130	—	—	**PDA 12** [1]	5081

The pitch angle should be stated when ordering. [1] Flush mounted version see switch product page. * Y/Δ start-up

630/2

R.P.M. = 2940

Frequency		Hz	total	125	250	500	1k	2k	4k	8k
L_{WA}	10°	dB(A)	112	84	97	104	108	106	101	92
L_{WA}	20°	dB(A)	114	87	99	107	110	109	104	95
L_{WA}	30°	dB(A)	116	89	101	109	112	111	106	97

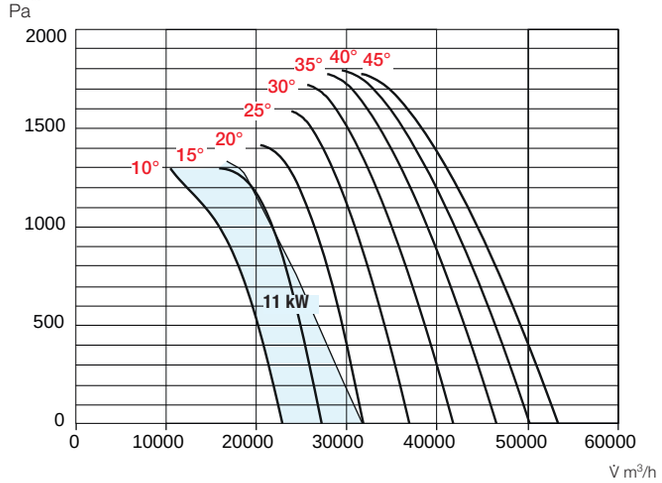

630/4

R.P.M. = 1450

Frequency		Hz	total	125	250	500	1k	2k	4k	8k
L_{WA}	10°	dB(A)	94	78	87	93	93	90	83	71
L_{WA}	20°	dB(A)	95	79	89	92	94	91	84	72
L_{WA}	30°	dB(A)	97	81	91	95	96	93	86	74

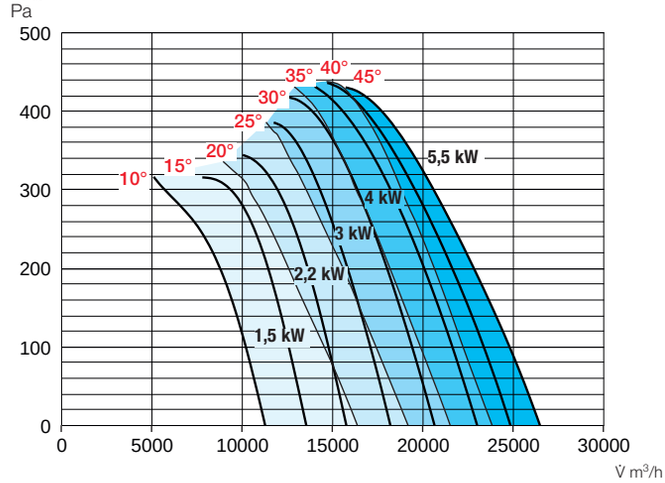

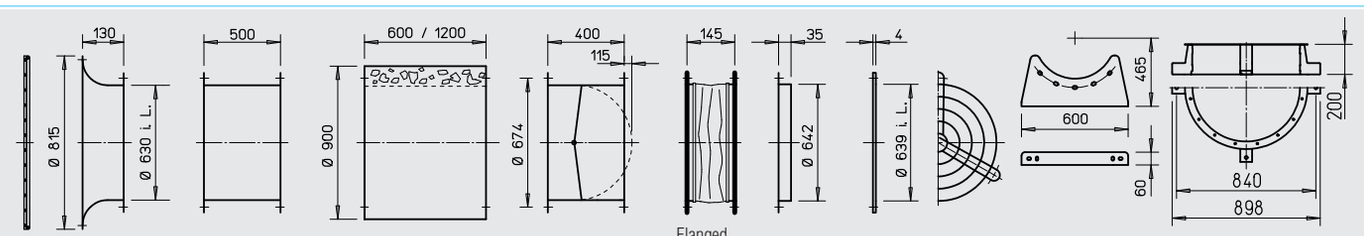

Bell mouth + guard **ASD-SGD 630** No. 1422

Extension duct **VR 630** No. 1410

Circular attenuators **RSD 630/..**

Automatic back-draught shutter **RVS 630** a) No. 2600

Flanged flex. connector **STS 630** No. 1228

Counter-flange **FR 630** No. 1211

Flat flange **FF 630** No. 4949

Guard **SG 630** No. 1243

Mounting feet **MK 630** (1 set = 2 pcs.) No. 1333

Mounting ring for vertical mounting **MRV 630** No. 1742

a) For motorised shutters see accessory pages

	Vibration dampers			
	Compression		**Suspension**	
	Type	Ref. no.	**Type**	Ref. no.
	SDD 2	1453	**SDZ 2**	1455
	SDD 2	1453	**SDZ 2**	1455
	SDD 2	1453	**SDZ 2**	1455
	SDD 2	1453	**SDZ 2**	1455
	SDD 2	1453	**SDZ 2**	1455
	—	—	—	—
	SDD 2	1453	**SDZ 2**	1455
	SDD 2	1453	**SDZ 2**	1455
	SDD 2	1453	**SDZ 2**	1455

Helios

Centrifugal performance characteristics with axial flow pattern: RADAX® VAR

COMPACT

In their compact casing, the RADAX® VAR impellers ensure high pressure and a large volume conveyed. The VAR's recipe for success lies in the combination of the performance characteristics of centrifugal fans with an axial flow pattern. Guiding the air in a straight line improves the efficiency and allows a significant reduction of the space required, as well as savings in terms of the ducting system.

PRESSURE-RESISTANT

This synergy has enormous benefits:

- Maximum performance with low energy costs.
- Low sound levels.
- High-pressures and volumes with the smallest of dimensions.
- Can be used universally.
- Freedom of planning.
- No need for deflections and shaped pieces on-site with the related resistances.
- Low installation costs.

UNIVERSAL

In addition to single phase types, the RADAX® VAR range offers the following:

- More Ø up to 1000 mm
- B VAR types for the smoke extraction insert pursuant to DIN 12101-3 F300 (60 min.) or F400, F600 (120 min.).
- Parallel units with large volumes and high pressures for garage ventilation (VDI 2053).
- Two-stage TwinVent® with maximum pressure values.

This information completes the "General Technical Information" section.

Features
RADAX® VAR is a range of high pressure in-line fans, combining the advantages of axial and centrifugal fans.
The mixed flow impeller combined with the fixed guide vanes are designed to provide high air flows and pressures very efficiently.

Air flow
The axial air flow pattern allows operation without loss, guide vanes improve and straighten the air and increase the efficiency of the fan. The VAR in-line installation eliminates the need for bulky bends, transformation pieces etc. including their resistances. This saves installation and energy costs.

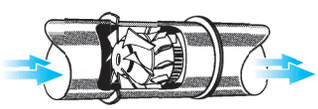

Casing
Casing flanges on both sides to DIN 24155, Pt.3 with guide vanes and motor support made from galvanised steel. Models with R.P.M. = 2800 of size 400, 450, 500 as well as all models of size 630 welded casing, hot-dip galvanised. Terminal box to IP 55 fixed to the outer casing.

Impeller
Mixed flow impeller with 8 spacious curved blades. Up to size 355 made from polymer. Models with R.P.M. = 2800 of size 355 as well as all models of size 400 to 630 made from hot-dip galvanised steel. Aluminium is available (additional charge) on demand.
VAR fans offer high efficiency, low operation noise, high corrosion resistance and low vibration operation through dynamic balance to DIN ISO 1940 Pt.1 – quality grade 6.3.

Air flow temperature
The standard models are suitable in the range from –30 °C to at least +40 °C. See also information on product pages. Higher temperature models are available on request.

Information	Page
Information for planning, Acoustics, explosion prot.	10 on
General technical information, speed control	15 on

Explosion protection
The ex-proof models conform to cluster II, category 2G for operation in zone 1 or 2.
According to Directive 2014/34/EU (ATEX), larger air gaps are specified which lead to a power reduction of up to 10%.

Air flow direction
The air flow of the fan cannot be reversed, however the fan is suitable for installation in any position. The correct direction of rotation and air flow are marked on the fan.

Installation position, mounting, condensation openings
To achieve the performance figures shown, a straight duct of 2 times the diameter in length downstream of the fan is required (and installed in ducting ideally the same upstream) (Figure 1).
☐ RADAX® VAR can be installed in any position. Where motor condensate drainage is used, ensure the drain holes face downwards.
☐ When installing the fan for vertical airflow as well as in an outside position or in a permanently humid or wet atmosphere, this must be specified at time of ordering.
On site assembly and mounting must to be carried in such a way that the vertically fitted fan is distortion-free and safe.

Positioning
To avoid transmission of vibration between fan and building the use of anti vibration mounts is recommended (accessory SDD, SDZ). Larger motors may protrude to the rear and cause uneven distribution due to their high weight. An extension duct VR (accessories) is provided to determine the centre of gravity!

Installation examples
☐ **Horizontal**
– **Figure 2**
Free intake, ducted on exhaust. Mounted on ceiling, wall or floor.

– **Figure 3**
Free intake with attenuator, ducted on exhaust. To reduce inlet and exhaust noise levels, attenuators can be fitted to both ends of the fan.

Fig. 1

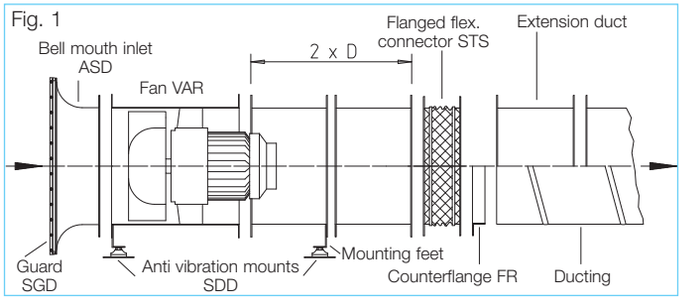

Fig. 2

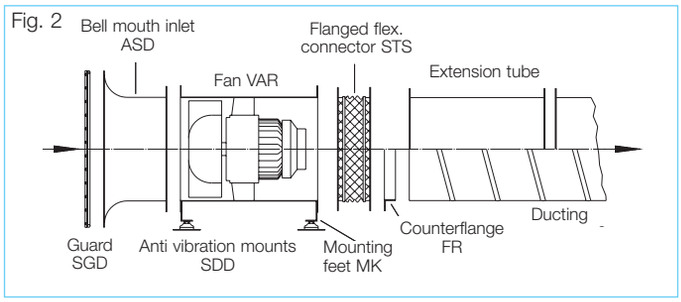

Fig. 3

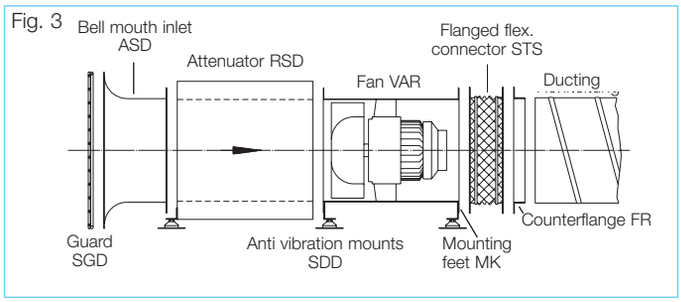

Fig. 4

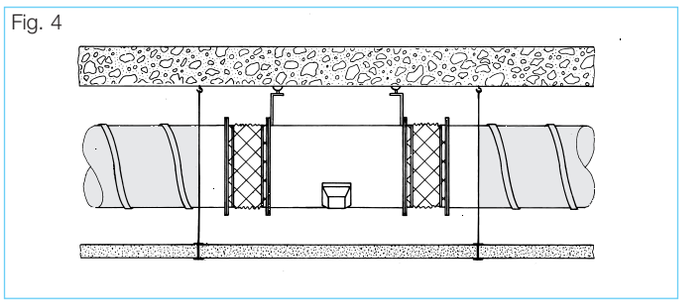

– **Figure 4**
Ceiling suspension
Figure 4 shows the typical installation for ventilation. The installation of VAR systems is possible without any additional expenses through direct suspension on ceilings or walls.
The casing is designed for straight in-line installation using the flanged ends (to DIN 24155 Pt. 3).

☐ **Vertical**
– **Figure 5**
In-line wall mounted installation with attenuator on intake. The accessories should be fixed separately to ensure that the fan may be easily removed for maintenance.

Fig. 5

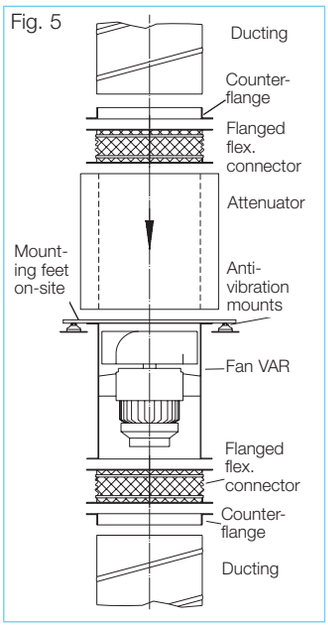

The following table facilitates the selection of RADAX® VAR high pressure fans by combining the parameters of static pressure Δp_{fa}, air flow volume $\dot{V}$, speed min^{-1}, sound pressure level dB(A) and impeller diameter DN mm.

Sizes from Ø 710 mm as well as twin and parallel VAR units are shown in a separate catalogue.

Diameter	R.P.M.	Sound pressure level - intake	Air flow volume $\dot{V}$ m³/h against static pressure = N / m² = free available pressure												
mm	min^{-1}	L_{PA} dB(A)	(Δp_{fa}) in Pa												
		at 4 m	0	50	100	150	200	300	400	500	600	700	800	900	1000
225	2800	61	1770	1700	1600	1510	1400								
225	1450	46	900	730											
250	2800	64	2540	2450	2350	2250	2150	1910							
250	1450	49	1250	1050											
280	2800	68	3320	3220	3110	3010	2900	2670	2360						
280	1450	52	1630	1400	1000										
315	2800	71	4670	4550	4430	4310	4200	3930	3650	3280					
315	1450	56	2510	2300	2060	1730									
355	2800	75	7220	7080	6980	6850	6700	6450	6150	5850	5500	5050			
355	1450	60	3540	3300	3050	2750	2200								
400	2800	78	10150	10000	9850	9700	9600	9300	9000	8700	8350	7950	7500	7100	6400
400	1450	63	5260	4950	4650	4310	3930								
400	930	52	3500	3060	2290										
450	2800	83	14200	14100	13900	13750	13600	13300	12900	12500	12200	11800	11400	10800	10350
450	1450	67	7280	6950	6650	6300	5900	4800							
450	930	56	4990	4520	3870										

Diameter	R.P.M.	Sound pressure level - intake	Air flow volume $\dot{V}$ m³/h against static pressure = N / m² = free available pressure												
mm	min^{-1}	L_{PA} dB(A)	(Δp_{fa}) in Pa												
		at 4 m	0	150	300	450	600	750	900	1050	1200	1550	1800		
500	2800	86	22310	21800	21400	20800	20300	19750	19200	18600	17900	16000	13500		
500	1450	70	9700	8640	7300										
500	930	59	6860	5150											
560	1450	73	13550	12500	11300	9850									
560	930	63	9850	8110											
560	725	56	7510												
630	1450	77	21460	20410	19110	17610	15760								
630	930	67	14040	12190	8740										
630	725	60	10690	7810											
	The following sizes are shown in a separate catalogue.														
710	1480	81	31350	30210	28920	27370	25680	23710	20790						
710	950	70	20110	18120	15390										
710	725	64	15330	12380											
800	1480	85	44870	43580	42210	40610	38810	36910	34780	32130	26670				
800	950	74	28770	26640	23850	19970									
800	725	67	21940	18810											
900	1480	88	63890	62450	60940	59300	57440	55410	53310	50990	48420	39610			
900	950	78	40990	38650	35710	32250	26830								
900	725	71	31260	27910	23160										
1000	1480	92	87640	86050	84410	82590	80770	78650	76400	74110	71650	66090	57450		
1000	950	81	56220	53690	50670	47080	42960	36050							
1000	725	74	42880	39330	34590	25090									

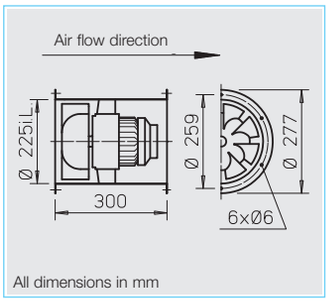

Specification

Casing
Manufactured in galvanised sheet steel with flanges on both sides to DIN 24155, Pt. 3, with fixed guide vanes and motor support.

Impeller
Optimised for high pressure and performance.
Specially developed mixed-flow curved impeller manufactured from impact resistant polymers.

Motor
Direct driven, maintenance free flange motor, totally enclosed with an aluminium casing and cooling fins, protected to IP 54. Sealed for life ball bearings with tropicalized protection of windings and radio suppression. Optional drainage holes made to order (please state installation position).

Speed control
For all speed controllable models the current is given in the "speed controlled" column of the table below which must be used when selecting a controller (see controller column). The air flow volumes can be seen from the characteristic curves. If the fan is to be controlled by a frequency inverter without a sine filter, this must be stated when ordering. This requires a change of fan design and potential additional costs. Explosion proof fans are not controllable.

Electrical connection
Terminal box fitted externally on the casing as standard (IP 55).

Installation
Installation in any position. Ensure that motor drainage holes (where used) face downwards.

Motor protection
All models (3~ except ex proof) have thermal contacts as standard which must be connected to a full motor protection unit (see table below). With the 1 ph. ex-proof models thermal contacts are wired in series with the winding which automatically resets after cooling.
Models without thermal contacts must be protected by a conventional circuit breaker.

Sound levels
Data shown within the performance curves refer to sound power levels. For determination of the lower sound pressure levels refer to diagram on "Technical information" page.
Sound immission and acoustic information on page 10 on.

Information	Page
Technical description	208
Selection chart	209
Design of systems	10 on

Made to order designs
Alternative voltages, frequencies, protection classes, acid protection, high temperatures etc. are available on request.

For safety and correct use note the technical information on page 15 on.

Type	Ref. no.	R.P.M.	Air flow volume (FID)	Motor power*	Voltage	Current* standard supply	Current* speed controlled	Wiring diagram	Maximum air flow temp. standard supply	Maximum air flow temp. speed controlled	Nominal weight (net)	5 step transformer controller Pole switch Type	Ref. no.	Full motor protection starter using the motor thermal contacts Type	Ref. no.	Anti vibration mounts comp Type	Anti vibration mounts susp Type
		min^{-1}	V m^3/h	kW	V	A	A	No.	+°C	+°C	kg						
1 Phase motor, 1 ph. / 50 Hz, protection to IP 54																	
VARW 225/4	6660	1450	900	0.10	230	0.50	0.55	966	60	40	10.5	**MWS 1,5**[1]	1947	**MW**	1579	**SDD 1**	**SDZ 1**
VARW 225/2	6661	2770	1778	0.35	230	1.90	2.50	966	60	40	10.5	**MWS 3**[1]	1948	**MW**	1579	**SDD 1**	**SDZ 1**
3 Phase motor, 50 Hz, protection to IP 54																	
VARD 225/4	6662	1420	880	0.10	400Y	0.20	0.20	469	60	40	10.5	**RDS 1**[1) 4)]	1314	**MD**	5849	**SDD 1**	**SDZ 1**
VARD 225/2	6663	2720	1750	0.28	400Y	0.60	0.60	469	60	40	10.5	**RDS 1**[1) 4)]	1314	**MD**	5849	**SDD 1**	**SDZ 1**
Pole-switching, 2 speed motor (Dahlander windings Y/YY), 3 ph. / 50 Hz, protection to IP 54												Pole switch					
VARD 225/4/2	6771	1460/2800	880/1800	0.06/0.30	400	0.22/0.57	—	472	60	—	10.5	**PDA 12**[3]	5081	**M 3**[2]	1293	**SDD 1**	**SDZ 1**
Explosion proof, E Ex de II B, 1 ph. / 50 Hz, temperature class T1-T3, protection to IP 55																	
VARW 225/4 Ex	6733	1400	950	0.06	230	0.70	—	757	40	—	12.0	not permitted		—	—	**SDD 1**	**SDZ 1**
VARW 225/2 Ex	6734	2650	1780	0.18	230	1.23	—	757	40	—	12.5	not permitted		—	—	**SDD 1**	**SDZ 1**
Explosion proof, E Exe II, 3 ph. / 50 Hz, temperature class T1-T3, protected to IP 54																	
VARD 225/4 Ex	6664	1400	940	0.12	400	0.41	—	470	40	—	12.5	not permitted		not permitted		**SDD 1**	**SDZ 1**
VARD 225/2 Ex	6665	2850	1930	0.25	400	0.72	—	470	40	—	12.5	not permitted		not permitted		**SDD 1**	**SDZ 1**

* Ex models: For nominal value of motor see information on page 16 [1] includes full motor protection unit [2] includes operation and speed switch [3] see product page for flush mounted version
[4] Frequency inverter with integrated Sine filter, Type FU-BS 2,5 , No. 5459, see product page FU.

225/2 R.P.M. = 2800

Frequency		Hz	Total	125	250	500	1k	2k	4k	8k
L_{WA}	Air noise	dB(A)	81	51	62	74	76	76	72	63
$L_{PA,4m}$	Air noise	dB(A)	61	31	42	54	56	56	52	43

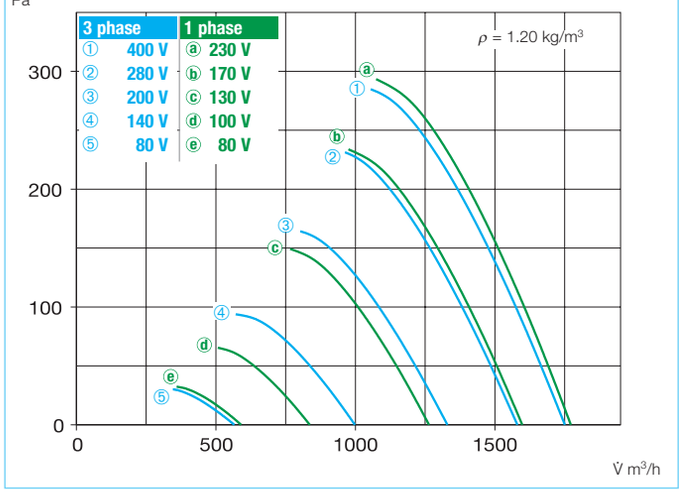

225/4 R.P.M. = 1450

Frequency		Hz	Total	125	250	500	1k	2k	4k	8k
L_{WA}	Air noise	dB(A)	66	41	55	60	62	59	52	43
$L_{PA,4m}$	Air noise	dB(A)	46	21	35	40	42	39	32	23

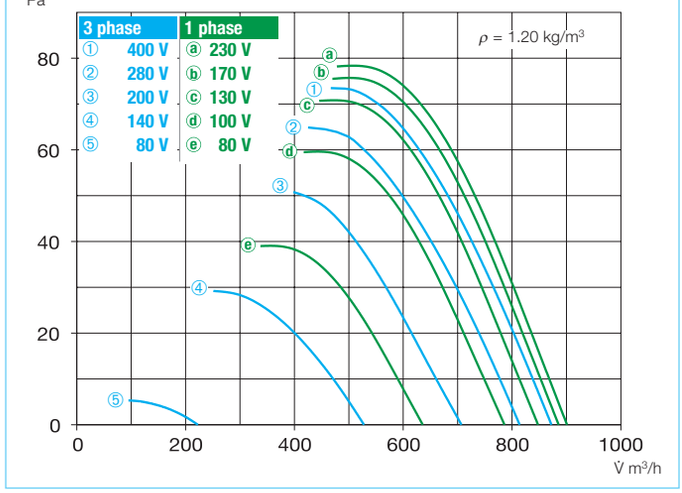

Other accessories	Page
[b] **Accessories for ex-proof fans**	
Flanged flexible connector Type STS 225 Ex Ref. no. 2500	
Flexible sleeve Type FM 225 Ex Ref. no. 1687	
Attenuators	421 on
Shutters and grilles	487 on
Speed controllers and switches	525 on

Accessories Specification see page 231 on

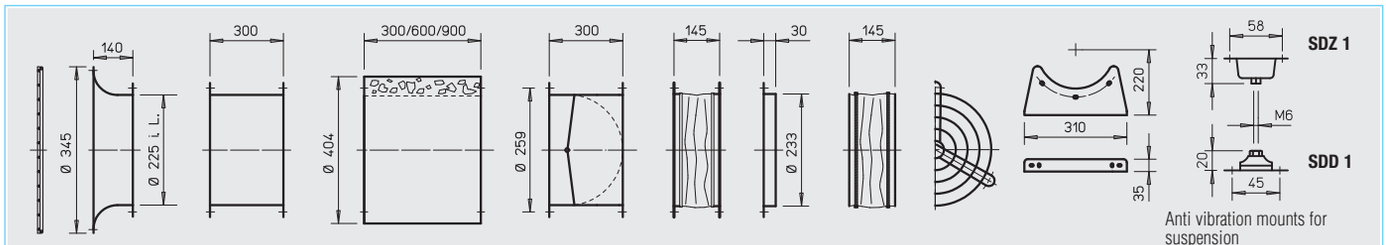

Bell mouth + guard **ASD-SGD 225** No. 1413

Extension duct **VR 225** No. 1401

Circular attenuators **RSD 225/..**

Automatic back-draught shutter **RVS 225** [a] No. 2591

Flanged flex. connector **STS 225** [b] No. 1218

Counter-flange **FR 225** No. 1201

Flexible sleeve **FM 225** [b] No. 1671

Guard **SG 225** No. 1215

Mounting feet **MK 225** (1 set = 2 pcs.) No. 1446

Anti vibration mounts for suspension **SDZ 1** (1 set = 4 pcs.) No. 1454
Anti vibration mounts for compression **SDD 1** (1 set = 4 pcs.) No. 1452

[a] For motorised shutters see accessory pages

[b] Types for explosion proof fans see above

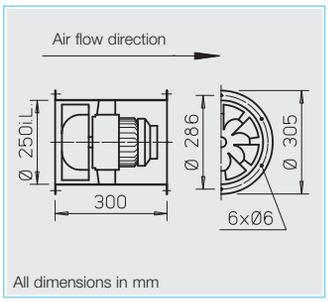

Specification

Casing
Manufactured in galvanised sheet steel with flanges on both sides to DIN 24155, Pt. 3, with fixed guide vanes and motor support.

Impeller
Optimised for high pressure and performance.
Specially developed mixed-flow curved impeller manufactured from impact resistant polymers.

Motor
Direct driven, maintenance free flange motor, totally enclosed with an aluminium casing and cooling fins, protected to IP 54. Sealed for life ball bearings with tropicalized protection of windings and radio suppression. Optional drainage holes made to order (please state installation position).

Speed control
For all speed controllable models the current is given in the "speed controlled" column of the table below which must be used when selecting a controller (see controller column). The air flow volumes can be seen from the characteristic curves. If the fan is to be controlled by a frequency inverter without a sine filter, this must be stated when ordering. This requires a change of fan design and potential additional costs. Explosion proof fans are not controllable.

Electrical connection
Terminal box fitted externally on the casing as standard (IP 55).

Installation
Installation in any position. Ensure that motor drainage holes (where used) face downwards.

Motor protection
All models (3~ except ex proof) have thermal contacts as standard which must be connected to a full motor protection unit (see table below). With the 1 ph. ex-proof models thermal contacts are wired in series with the winding which automatically resets after cooling.
Models without thermal contacts must be protected by a conventional circuit breaker.

Sound levels
Data shown within the performance curves refer to sound power levels. For determination of the lower sound pressure levels refer to diagram on "Technical information" page.
Sound immission and acoustic information on page 10 on.

Information	Page
Technical description	208
Selection chart	209
Design of systems	10 on

Made to order designs
Alternative voltages, frequencies, protection classes, acid protection, high temperatures etc. are available on request.

For safety and correct use note the technical information on page 15 on.

Type	Ref. no.	R.P.M.	Air flow volume (FID)	Motor power*	Voltage	Current* standard supply	Current* speed controlled	Wiring diagram	Maximum air flow temp. standard supply	Maximum air flow temp. speed controlled	Weight net	5 step transformer controller Pole switch		Full motor protection starter using the motor thermal contacts		Anti vibration mounts comp	Anti vibration mounts susp
		min^{-1}	V m³/h	kW	V	A	A	No.	+°C	+°C	kg	Type	Ref. no.	Type	Ref. no.	Type	Type
1 Phase motor, 1 ph. / 50 Hz, protection to IP 54																	
VARW 250/4	6666	1420	1210	0.12	230	0.46	0.60	966	60	40	11.5	**MWS 1,5**[1]	1947	**MW**	1579	**SDD 1**	**SDZ 1**
VARW 250/2	6667	2840	2540	0.55	230	2.60	3.90	966	60	40	13.0	**MWS 5**[1]	1949	**MW**	1579	**SDD 1**	**SDZ 1**
3 Phase motor, 50 Hz, protection to IP 54																	
VARD 250/4	6668	1410	1250	0.09	400	0.30	0.30	469	60	40	11.5	**RDS 1**[1) 4)]	1314	**MD**	5849	**SDD 1**	**SDZ 1**
VARD 250/2	6669	2800	2450	0.47	400	1.10	1.10	469	60	40	11.5	**RDS 2**[1) 4)]	1315	**MD**	5849	**SDD 1**	**SDZ 1**
Pole-switching, 2 speed motor (Dahlander windings Y/YY), 3 ph. / 50 Hz, protection to IP 54												Pole switch					
VARD 250/4/2	6773	1425/2750	1200/2400	0.75/0.49	400	0.24/0.94	—	472	60	—	13.0	**PDA 12**[3]	5081	**M 3**[2]	1293	**SDD 1**	**SDZ 1**
Explosion proof, E Ex de II B, 1 ph. / 50 Hz, temperature class T1-T3, protection to IP 55																	
VARW 250/4 Ex	6735	1400	1290	0.06	230	0.70	—	757	40	—	13.0	not permitted		—	—	**SDD 1**	**SDZ 1**
Explosion proof, E Exe II, 3 ph. / 50 Hz, temperature class T1-T3, protected to IP 54																	
VARD 250/4 Ex	6670	1400	1300	0.12	400	0.41	—	470	40	—	13.0	not permitted		not permitted		**SDD 1**	**SDZ 1**
VARD 250/2 Ex	6671	2825	2590	0.37	400	0.95	—	470	40	—	15.5	not permitted		not permitted		**SDD 1**	**SDZ 1**

* Ex models: For nominal value of motor see information on page 16 [1] includes full motor protection unit [2] includes operation and speed switch [3] see product page for flush mounted version
[4] Frequency inverter with integrated Sine filter, Type FU-BS 2,5 , No. 5459, see product page FU.

250/2 R.P.M. = 2800

Frequency		Hz	Total	125	250	500	1k	2k	4k	8k
L_{WA}	Air noise	dB(A)	84	55	65	77	79	80	75	67
$L_{PA,4m}$	Air noise	dB(A)	64	35	45	57	59	60	55	47

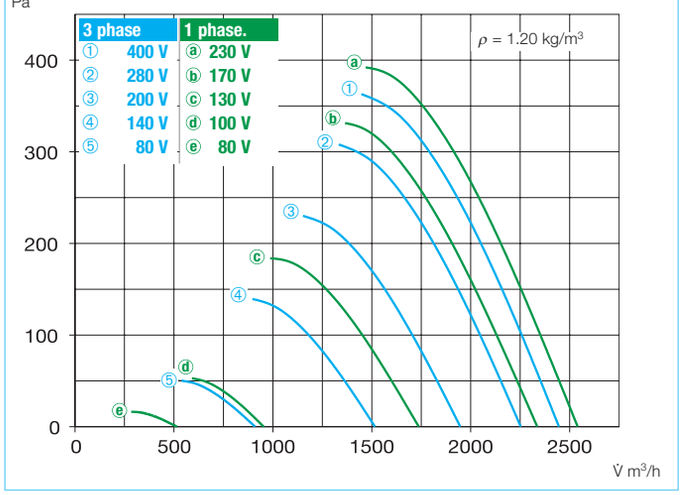

250/4 R.P.M. = 1450

Frequency		Hz	Total	125	250	500	1k	2k	4k	8k
L_{WA}	Air noise	dB(A)	69	44	58	63	65	63	56	46
$L_{PA,4m}$	Air noise	dB(A)	49	24	38	43	45	43	36	26

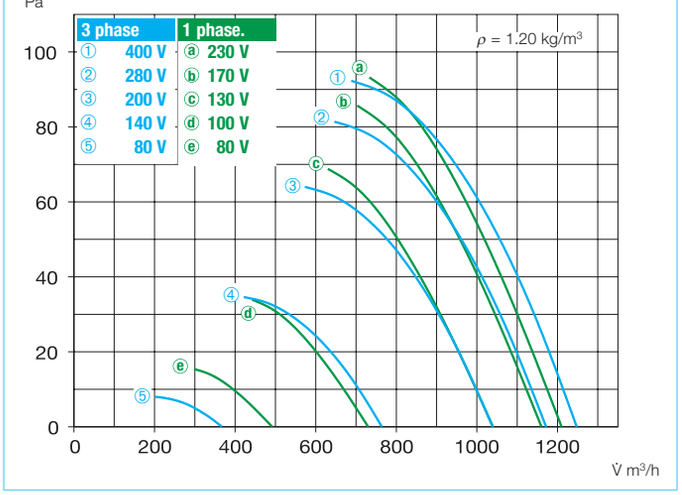

Other accessories	Page
[b] Accessories for ex-proof fans	
Flanged flexible connector Type STS 250 Ex Ref. no. 2501	
Flexible sleeve Type FM 250 Ex Ref. no. 1688	
Attenuators	421 on
Shutters and grilles	487 on
Speed controllers and switches	525 on

Accessories Specification see page 231 on

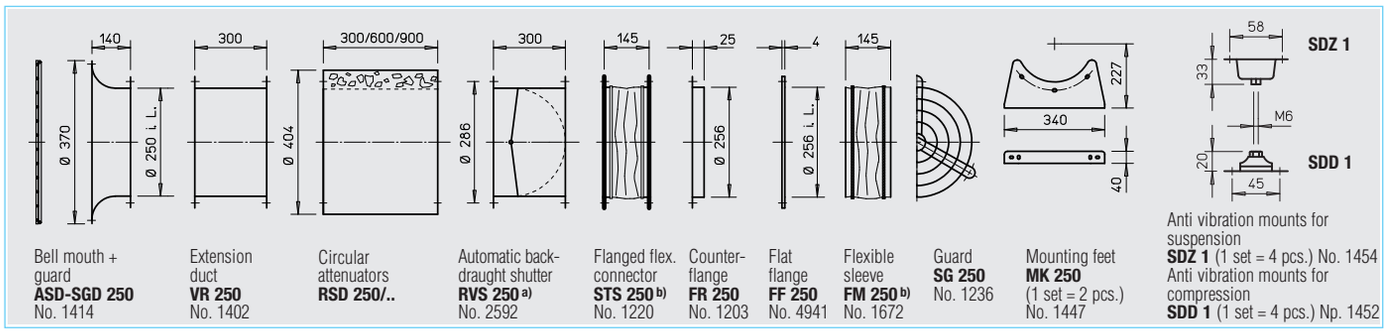

Bell mouth + guard **ASD-SGD 250** No. 1414

Extension duct **VR 250** No. 1402

Circular attenuators **RSD 250/..**

Automatic back-draught shutter **RVS 250** [a] No. 2592

Flanged flex. connector **STS 250** [b] No. 1220

Counter-flange **FR 250** No. 1203

Flat flange **FF 250** No. 4941

Flexible sleeve **FM 250** [b] No. 1672

Guard **SG 250** No. 1236

Mounting feet **MK 250** (1 set = 2 pcs.) No. 1447

Anti vibration mounts for suspension **SDZ 1** (1 set = 4 pcs.) No. 1454
Anti vibration mounts for compression **SDD 1** (1 set = 4 pcs.) Np. 1452

[a] For motorised shutters see accessory pages

[b] Types for explosion proof fans see above

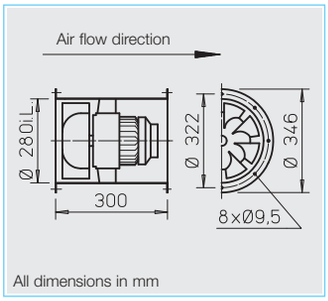

Specification

Casing
Manufactured in galvanised sheet steel with flanges on both sides to DIN 24155, Pt. 3, with fixed guide vanes and motor support.

Impeller
Optimised for high pressure and performance.
Specially developed mixed-flow curved impeller manufactured from impact resistant polymers.

Motor
Direct driven, maintenance free flange motor, totally enclosed with an aluminium casing and cooling fins, protected to IP 54. Sealed for life ball bearings with tropicalized protection of windings and interference-free. Optional drainage holes made to order (please state installation position).

Speed control
For all speed controllable models the current is given in the "speed controlled" column of the table below which must be used when selecting a controller (see controller column). The air flow volumes can be seen from the characteristic curves. If the fan is to be controlled by a frequency inverter without a sine filter, this must be stated when ordering. This requires a change of fan design and potential additional costs. Explosion proof fans are not controllable.

Electrical connection
Terminal box fitted externally on the casing as standard (IP 55).

Installation
Installation in any position. Ensure that motor drainage holes (where used) face downwards.

Motor protection
All models (3~ except ex proof) have thermal contacts as standard which must be connected to a full motor protection unit (see table below). With the 1 ph. ex-proof models thermal contacts are wired in series with the winding which automatically resets after cooling.
Models without thermal contacts must be protected by a conventional circuit breaker.

Sound levels
Data shown within the performance curves refer to sound power levels. For determination of the lower sound pressure levels refer to diagram on "Technical information" page.
Sound emission and acoustic information on page 10 on.

Information	Page
Technical description	208
Selection chart	209
Information for planning	10 on

Made to order designs
Alternative voltages, frequencies, protection classes, acid protection, high temperatures etc. are available on request.

For safety and correct use note the technical information on page 15 on.

Type	Ref. no.	R.P.M.	Air flow volume (FID)	Motor power*	Voltage	Current* standard supply	Current* speed controlled	Wiring diagram	Maximum air flow temp. standard supply	Maximum air flow temp. speed controlled	Nominal weight (net)	5 step transformer controller Pole switch		Full motor protection starter using the motor thermal contacts		Anti vibration mounts comp	Anti vibration mounts susp
		min^{-1}	V m^3/h	kW	V	A	A	No.	+°C	+°C	kg	Type	Ref. no.	Type	Ref. no.	Type	Type
1 Phase motor, 1 ph. / 50 Hz, protection to IP 54																	
VARW 280/4	6672	1330	1600	0.11	230	0.50	0.60	966	60	40	12.0	**MWS 1,5**[1]	1947	**MW**	1579	**SDD 1**	**SDZ 1**
VARW 280/2	6659	2715	3350	0.79	230	3.70	4.90	967	60	40	14.0	**MWS 7,5**[1]	1950	**MW**	1579	**SDD 1**	**SDZ 1**
3 Phase motor, 50 Hz, protection to IP 54																	
VARD 280/4	6673	1370	1650	0.12	400	0.35	0.35	469	60	40	12.0	**RDS 1**[1) 4)]	1314	**MD**	5849	**SDD 1**	**SDZ 1**
VARD 280/2	6674	2705	3315	0.80	400	1.52	1.64	469	60	40	13.5	**RDS 2**[1) 4)]	1315	**MD**	5849	**SDD 1**	**SDZ 1**
Pole-switching, 2 speed motor (Dahlander windings Y/YY), 3 ph. / 50 Hz, protection to IP 54												Pole switch					
VARD 280/4/2	6775	1405/2810	1760/3500	0.14/0.91	400	0.44/1.78	—	472	60	—	16.0	**PDA 12**[3]	5081	**M 3**[2]	1293	**SDD 1**	**SDZ 1**
Explosion proof, E Ex de II B, 1 ph. / 50 Hz, temperature class T1-T3, protection to IP 55																	
VARW 280/4 Ex	6737	1330	1720	0.18	230	1.25	—	757	40	—	14.0	not permitted		—	—	**SDD 1**	**SDZ 1**
Explosion proof, E Exe II, 3 ph. / 50 Hz, temperature class T1-T3, protected to IP 54																	
VARD 280/4 Ex	6675	1400	1820	0.12	400	0.41	—	470	40	—	16.0	not permitted		not permitted		**SDD 1**	**SDZ 1**
VARD 280/2 Ex	6676	1860	3720	0.75	400	1.65	—	470	40	—	18.0	not permitted		not permitted		**SDD 1**	**SDZ 1**

* Ex models: For nominal value of motor see information on page 16 [1] includes full motor protection unit [2] includes operation and speed switch [3] see product page for flush mounted version
[4] Frequency inverter with integrated Sine filter, Type FU-BS 2,5 , No. 5459, see product page FU.

280/2 R.P.M. = 2800

Frequency		Hz	Total	125	250	500	1k	2k	4k	8k
L_{WA}	Air noise	dB(A)	88	58	69	80	83	83	79	70
$L_{PA,4m}$	Air noise	dB(A)	68	38	49	60	63	63	59	50

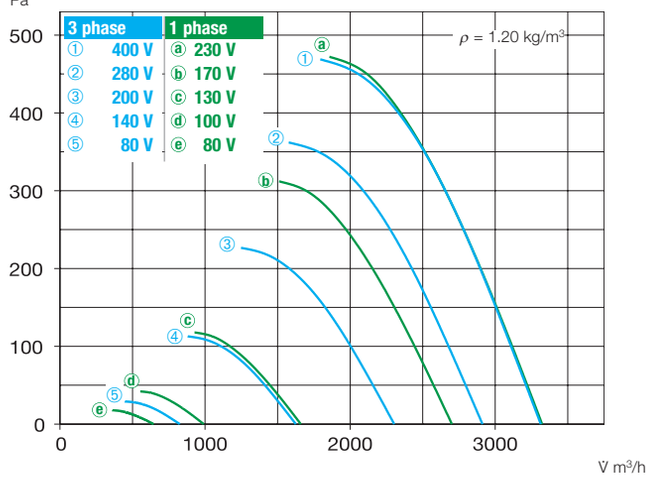

280/4 R.P.M. = 1450

Frequency		Hz	Total	125	250	500	1k	2k	4k	8k
L_{WA}	Air noise	dB(A)	72	48	62	66	69	66	59	49
$L_{PA,4m}$	Air noise	dB(A)	52	28	42	46	49	46	39	29

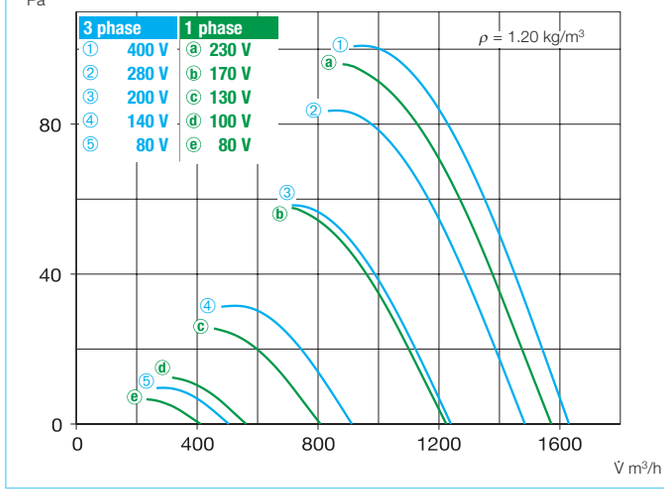

Other accessories	Page
[b] Accessories for ex-proof fans	
Flanged flexible connector Type STS 280 Ex Ref. no. 2502	
Flexible sleeve Type FM 280 Ex Ref. no. 1689	
Attenuators	421 on
Shutters and grilles	487 on
Speed controllers and switches	525 on

Accessories Specification see page 231 on

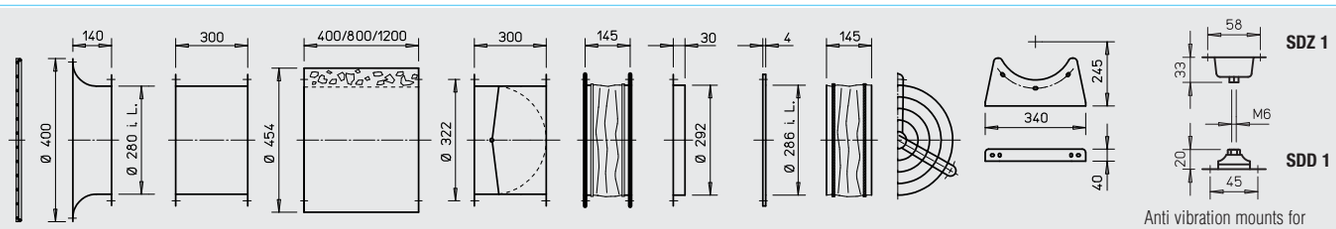

Bell mouth + guard **ASD-SGD 280** No. 1415

Extension duct **VR 280** No. 1403

Circular attenuators **RSD 280/..**

Automatic back-draught shutter **RVS 280** [a] No. 2593

Flanged flex. connector **STS 280** [b] No. 1231

Counter-flange **FR 280** No. 1214

Flat flange **FF 280** No. 4942

Flexible sleeve **FM 280** [b] No. 1673

Guard **SG 280** No. 1428

Mounting feet **MK 280** (1 set = 2 pcs.) No. 1447

Anti vibration mounts for suspension **SDZ 1** (1 set = 4 pcs.) No. 1454
Anti vibration mounts for compression **SDD 1** (1 set = 4 pcs.) No. 1452

[a] For motorised shutters see accessory pages

[b] Types for explosion proof fans see above

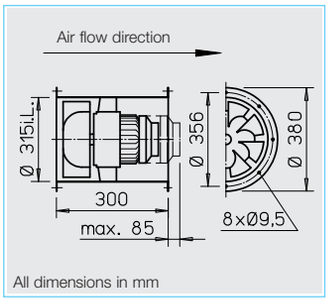

Specification

Casing
Manufactured in galvanised sheet steel with flanges on both sides to DIN 24155, Pt. 3, with fixed guide vanes and motor support.

Impeller
Optimised for high pressure and performance.
Specially developed mixed-flow curved impeller manufactured from impact resistant polymers.

Motor
Direct driven, maintenance free flange motor, totally enclosed with an aluminium casing and cooling fins, protected to IP 54. Sealed for life ball bearings with tropicalized protection of windings and interference-free. Optional drainage holes made to order (please state installation position).

Speed control
For all speed controllable models the current is given in the "speed controlled" column of the table below which must be used when selecting a controller (see controller column). The air flow volumes can be seen from the characteristic curves. If the fan is to be controlled by a frequency inverter without a sine filter, this must be stated when ordering. This requires a change of fan design and potential additional costs. Explosion proof fans are not controllable.

Electrical connection
Terminal box fitted externally on the casing as standard (IP 55).

Installation
Installation in any position. Ensure that motor drainage holes (where used) face downwards.

Motor protection
All models (3~ except ex proof) have thermal contacts as standard which must be connected to a full motor protection unit (see table below). With the 1 ph. ex-proof models thermal contacts are wired in series with the winding which automatically resets after cooling.
Models without thermal contacts must be protected by a conventional circuit breaker.

Sound levels
Data shown within the performance curves refer to sound power levels. For determination of the lower sound pressure levels refer to diagram on "Technical information" page.
Sound emission and acoustic information on page 10 on.

Information	Page
Technical description	208
Selection chart	209
Information for planning	10 on

Made to order designs
Alternative voltages, frequencies, protection classes, acid protection, high temperatures etc. are available on request.

For safety and correct use note the technical information on page 15 on.

Type	Ref. no.	R.P.M.	Air flow volume (FID)	Motor power*	Voltage	Current* standard supply	Current* speed controlled	Wiring diagram	Maximum air flow temp. standard supply	Maximum air flow temp. speed controlled	Nominal weight (net)	5 step transformer controller Pole switch Type	Ref. no.	Full motor protection starter using the motor thermal contacts Type	Ref. no.	Anti vibration mounts comp	Anti vibration mounts susp
		min^{-1}	V m^3/h	kW	V	A	A	No.	+°C	+°C	kg	Type	Ref. no.	Type	Ref. no.	Type	Type
1 Phase motor, 1 ph. / 50 Hz, protection to IP 54																	
VARW 315/4	6677	1440	2480	0.23	230	1.10	1.17	966	60	40	13.0	**MWS 3**[1]	1948	**MW**	1579	**SDD 1**	**SDZ 1**
3 Phase motor, 50 Hz, protection to IP 54																	
VARD 315/4	6678	1450	2510	0.22	400	0.60	0.70	469	60	40	13.0	**RDS 1**[1) 4)]	1314	**MD**	5849	**SDD 1**	**SDZ 1**
Two-speed, 3 ph., 50 Hz, Y/△ switch, protection to IP 54																	
VARD 315/2/2	6679	1520/2650	2921/4670	1.29/1.35	400Y/△	1.5/2.75	2.8	520	60	40	20.5	**RDS 4**[1]	1316	**M 4**[2]	1571	**SDD 1**	**SDZ 1**
Pole-switching, 2 speed motor (Dahlander windings Y/YY), 3 ph. / 50 Hz, protection to IP 54												Pole switch					
VARD 315/4/2	6777	1480/2890	2730/5340	0.42/1.83	400	1.2/3.3	—	472	60	—	20.5	**PDA 12**[3]	5081	**M 3**[2]	1293	**SDD 1**	**SDZ 1**
Explosion proof, E Ex de II B, 1 ph. / 50 Hz, temperature class T1-T3, protection to IP 55																	
VARW 315/4 Ex	6738	1450	2680	0.18	230	1.25	—	757	40	—	15.0	not permitted		—	—	**SDD 1**	**SDZ 1**
Explosion proof, E Exe II, 3 ph. / 50 Hz, temperature class T1-T3, protected to IP 54																	
VARD 315/4 Ex	6680	1420	2610	0.37	400	1.14	—	470	40	—	17.0	not permitted		not permitted		**SDD 1**	**SDZ 1**
VARD 315/2 Ex	6681	2860	5260	1.50	400	3.15	—	470	40	—	23.0	not permitted		not permitted		**SDD 1**	**SDZ 1**

* Ex models: For nominal value of motor see information on page 16 [1] includes full motor protection unit [2] includes operation and speed switch [3] see product page for flush mounted version
[4] Frequency inverter with integrated Sine filter, Type FU-BS 2,5 , No. 5459, see product page FU.

315/2 R.P.M. = 2700

Frequency		Hz	Total	125	250	500	1k	2k	4k	8k
L_{WA}	Air noise	dB(A)	91	62	73	84	86	87	82	74
$L_{PA,4m}$	Air noise	dB(A)	71	42	53	64	66	67	62	54

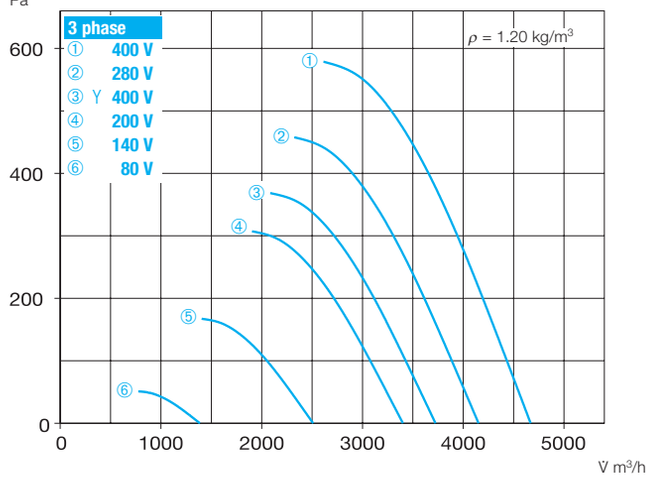

315/4 R.P.M. = 1450

Frequency		Hz	Total	125	250	500	1k	2k	4k	8k
L_{WA}	Air noise	dB(A)	76	52	65	70	72	70	63	53
$L_{PA,4m}$	Air noise	dB(A)	56	32	45	50	52	50	43	33

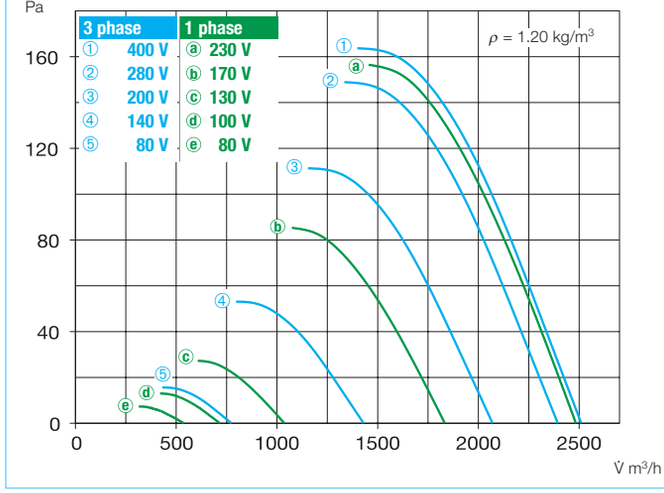

Other accessories	Page
[b] Accessories for ex-proof fans	
Flanged flexible connector Type STS 315 Ex Ref. no. 2503	
Flexible sleeve Type FM 315 Ex Ref. no. 1690	
Attenuators	421 on
Shutters and grilles	487 on
Speed controllers and switches	525 on

Accessories Specification see page 231 on

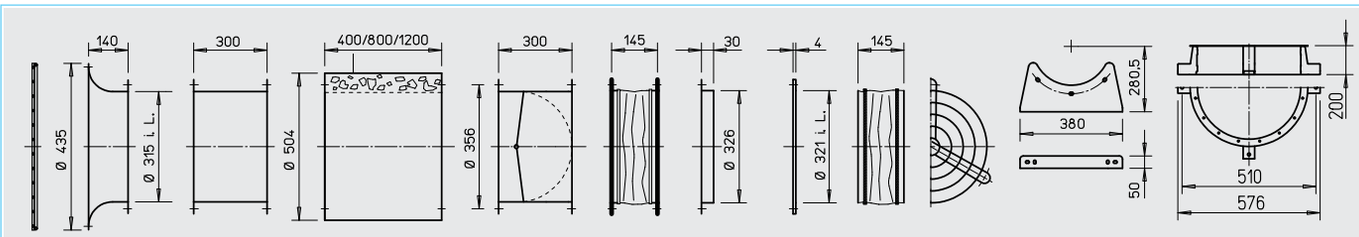

Bell mouth + guard **ASD-SGD 315** No. 1416

Extension duct **VR 315** No. 1404

Circular attenuators **RSD 315/..**

Automatic back-draught shutter **RVS 315** [a] No. 2594

Flanged flex. connector **STS 315** [b] No. 1221

Counter-flange **FR 315** No. 1204

Flat flange **FF 315** No. 4943

Flexible sleeve **FM 315** [b] No. 1674

Guard **SG 315** No. 1237

Mounting feet **MK 315** (1 set = 2 pcs.) No. 1448

Mounting ring for vertical mounting **MRV 315** No. 1755

[a] For motorised shutters see accessory pages

[b] Types for explosion proof fans see above

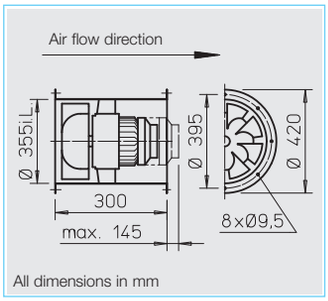

Specification

Casing
Manufactured in galvanised sheet steel with flanges on both sides to DIN 24155, Pt. 3, with fixed guide vanes and motor support.

Impeller
Optimised for high pressure and performance.
Specially developed mixed-flow curved impeller manufactured from impact resistant polymers (models with R.P.M. = 2800 from hot dipped galvanised steel).

Motor
Direct driven, maintenance free flange motor, totally enclosed with an aluminium casing and cooling fins, protected to IP 54. Sealed for life ball bearings with tropicalized protection of windings and interference-free. Optional drainage holes made to order (please state installation position).

Speed control
For all speed controllable models the current is given in the "speed controlled" column of the table below which must be used when selecting a controller (see controller column). The air flow volumes can be seen from the characteristic curves. If the fan is to be controlled by a frequency inverter without a sine filter, this must be stated when ordering. This requires a change of fan design and potential additional costs. Explosion proof fans are not controllable.

Electrical connection
Terminal box fitted externally on the casing as standard (IP 55).

Installation
Installation in any position. Ensure that motor drainage holes (where used) face downwards.

Motor protection
All models (excluding ex-proof models and model VARD 355/4/2) have thermal contacts as standard which must be connected to a full motor protection unit (see table below) for effective motor protection.
Models without thermal contacts must be protected by a conventional circuit breaker.

Sound levels
Data shown within the performance curves refer to sound power levels. For determination of the lower sound pressure levels refer to diagram on "Technical information" page.
Sound emission and acoustic information on page 10 on.

Information	Page
Technical description	208
Selection chart	209
Information for planning	10 on

Made to order designs
Alternative voltages, frequencies, protection classes, acid protection, high temperatures etc. are available on request.

For safety and correct use note the technical information on page 15 on.

Type	Ref. no.	R.P.M.	Air flow volume (FID)	Motor power*	Voltage	Current* standard supply	Current* speed controlled	Wiring diagram	Maximum air flow temp. standard supply	Maximum air flow temp. speed controlled	Nominal weight (net)	5 step transformer controller Pole switch		Full motor protection starter using the motor thermal contacts		Anti vibration mounts comp	Anti vibration mounts susp
		min⁻¹	V m³/h	kW	V	A	A	No.	+°C	+°C	kg	Type	Ref. no.	Type	Ref. no.	Type	Type
1 Phase motor, 1 ph. / 50 Hz, protection to IP 54																	
VARW 355/4	6682	1380	3470	0.37	230	3.30	2.35	966	60	40	21.0	**MWS 3**[1)]	1948	**MW**	1579	**SDD 1**	**SDZ 1**
3 Phase motor, 50 Hz, protection to IP 54																	
VARD 355/4	6683	1440	3550	0.40	400	0.87	1.20	469	60	40	15.5	**RDS 1**[1) 5)]	1314	**MD**	5849	**SDD 1**	**SDZ 1**
Two-speed, 3 ph., 50 Hz, Y/△ switch, protection to IP 54																	
VARD 355/2/2	6684	2415/2790	6040/7220	2.06/2.81	400Y/Δ	3.40/5.40	—	520	60	30	21.5	**RDS 7**[1)]	1578	**M 4**[2)]	1571	**SDD 1**	**SDZ 1**
Pole-switching, 2 speed motor (Dahlander windings Y/YY), 3 ph. / 50 Hz, protection to IP 54												Pole switch					
VARD 355/4/2	6779	1470/2870	3830/7500	0.48/3.11	400	1.35/5.50	—	471	40	—	29.0	**PDA 12**[3)]	5081	**M 3**[2)]	1293	**SDD 1**	**SDZ 1**
Explosion proof, E Exe II, 3 ph. / 50 Hz, temperature class T1-T3, protected to IP 54																	
VARD 355/4 Ex	6685	1420	3740	0.37	400	1.14	—	470	40	—	19.0	not permitted		not permitted		**SDD 1**	**SDZ 1**
VARD 355/2 Ex[4)]	6686	2860	7580	2.50	400	4.85/2.77	—	498	40	—	33.0	not permitted		not permitted		**SDD 1**	**SDZ 1**

* Ex models: For nominal value of motor see information on page 16 [1)] includes full motor protection unit [2)] includes operation and speed switch [3)] see product page for flush mounted version
[4)] Vibration monitoring is necessary (on site) pursuant to DIN EN 14986. [5)] Frequency inverter with integrated Sine filter, Type FU-BS 2,5 , No. 5459, see product page FU.

355/2 R.P.M. = 2800

Frequency		Hz	Total	125	250	500	1k	2k	4k	8k
L_{WA}	Air noise	dB(A)	95	65	76	88	90	90	86	77
$L_{PA,4m}$	Air noise	dB(A)	75	45	56	68	70	70	66	57

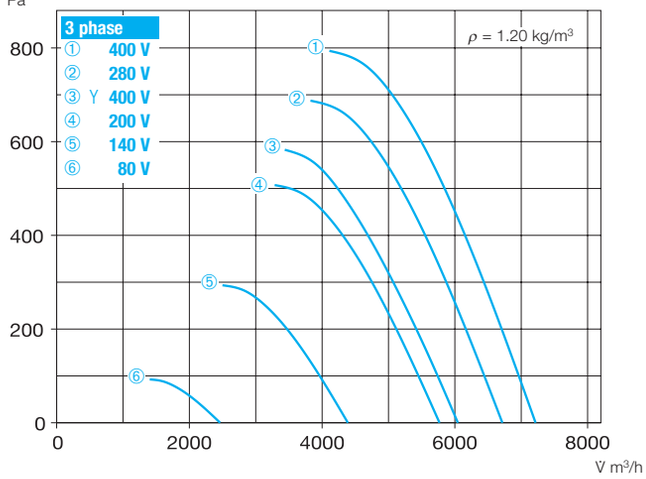

355/4 R.P.M. = 1400

Frequency		Hz	Total	125	250	500	1k	2k	4k	8k
L_{WA}	Air noise	dB(A)	80	55	69	73	76	73	66	56
$L_{PA,4m}$	Air noise	dB(A)	60	35	49	53	56	53	46	36

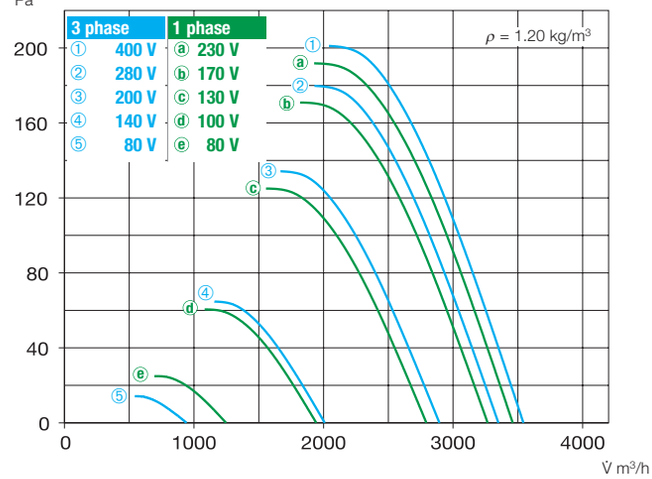

Axial and VAR fans

Other accessories	Page
[b] Accessories for ex-proof fans	
Flanged flexible connector Type STS 355 Ex Ref. no. 2504	
Flexible sleeve Type FM 355 Ex Ref. no. 1691	
Attenuators	421 on
Shutters and grilles	487 on
Speed controllers and switches	525 on

Accessories Specification see page 231 on

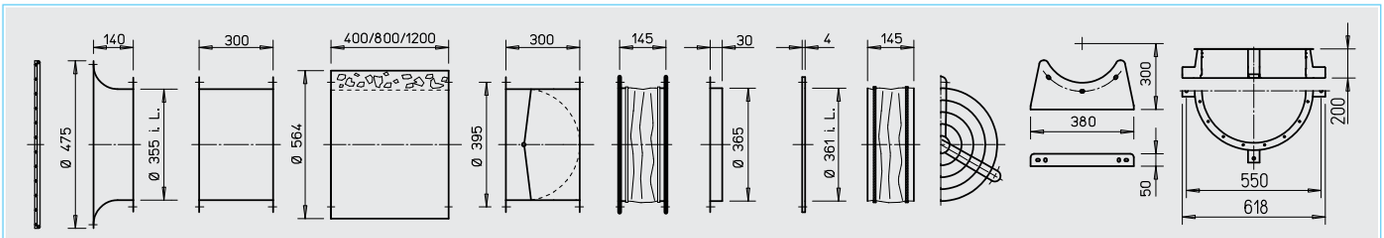

Bell mouth + guard **ASD-SGD 355** No. 1417

Extension duct **VR 355** No. 1405

Circular attenuators **RSD 355/..**

Automatic back-draught shutter **RVS 355** [a] No. 2595

Flanged flex. connector **STS 355** [b] No. 1222

Counter-flange **FR 355** No. 1205

Flat flange **FF 355** No. 4944

Flexible sleeve **FM 355** [b] No. 1675

Guard **SG 355** No. 1238

Mounting feet **MK 355** (1 set = 2 pcs.) No. 1448

Mounting ring for vertical mounting **MRV 355** No. 1759

[a] For motorised shutters see accessory pages

[b] Types for explosion proof fans see above

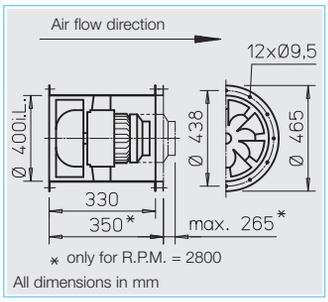

Specification

Casing
Manufactured in galvanised steel with flanges on both sides to DIN 24155, Pt. 3, vanes and fixed motor support. Models with R.P.M. = 2800 with welded casing made from hot dipped galvanised steel.

Impeller
Optimised for high pressure and performance.
Specially developed mixed-flow curved impeller manufactured from hot dipped galvanised steel.

Motor
Direct driven, maintenance free flange motor, totally enclosed with an aluminium casing and cooling fins, protected to IP 54. Sealed for life ball bearings with tropicalized protection of windings and interference-free. Optional drainage holes made to order (please state installation position).

Speed control
For all speed controllable models the current is given in the "speed controlled" column of the table below which must be used when selecting a controller (see controller column). The air flow volumes can be seen from the characteristic curves. If the fan is to be controlled by a frequency inverter without a sine filter, this must be stated when ordering. This requires a change of fan design and potential additional costs. Explosion proof fans are not controllable.

Electrical connection
Terminal box fitted externally on the casing as standard (IP 55).

Installation
Installation in any position. Ensure that motor drainage holes (where used) face downwards.

Motor protection
All models (excluding ex-proof models and model VARD 400/4/2) have thermal contacts as standard which must be connected to a full motor protection unit (see table below) for effective motor protection.
Models without thermal contacts must be protected by a conventional circuit breaker.

Sound levels
Data shown within the performance curves refer to sound power levels. For determination of the lower sound pressure levels refer to diagram on "Technical information" page.
Sound emission and acoustic information on page 10 on.

Information	Page
Technical description	208
Selection chart	209
Information for planning	10 on

Made to order designs
Alternative voltages, frequencies, protection classes, acid protection, high temperatures etc. are available on request.

For safety and correct use note the technical information on page 15 on.

Type	Ref. no.	R.P.M.	Air flow volume (FID)	Motor power*	Voltage	Current* standard supply	Current* speed controlled	Wiring diagram	Maximum air flow temp. standard supply	Maximum air flow temp. speed controlled	Nominal weight (net)	5 step transformer controller Pole switch Type	Ref. no.	Full motor protection starter using the motor thermal contacts Type	Ref. no.	Anti vibration mounts comp	Anti vibration mounts susp
		min⁻¹	V m³/h	kW	V	A	A	No.	+°C	+°C	kg						
1 Phase motor, 1 ph. / 50 Hz, protection to IP 54																	
VARW 400/4	6688	1375	5130	0.70	230	3.00	3.35	967	60	40	22.5	**MWS 5**[1]	1949	**MW**	1579	**SDD 1**	**SDZ 1**
3 Phase motor, 50 Hz, protection to IP 54																	
VARD 400/4	6690	1400	5240	0.72	400	1.95	2.00	469	60	40	22.5	**RDS 4**[1) 5)]	1316	**MD**	5849	**SDD 1**	**SDZ 1**
Two-speed, 3 ph., 50 Hz, Y/△ switch, protection to IP 54																	
VARD 400/2/2	6691	2475/2800	8320/10610	3.63/4.95	400Y/△	5.75/7.95	—	520	60	40	74.0	**RDS 11**[1]	1332	**M 4**[2]	1571	**SDD 1**	**SDZ 2**
Pole-switching, 2 speed motor (Dahlander windings Y/YY), 3 ph. / 50 Hz, protection to IP 54												Pole switch					
VARD 400/4/2	6782	1400/2890	5220/10700	0.80/5.90	400	2.43/9.13	—	471	40	—	74.0	**PDA 12**[3]	5081	**M 3**[2]	1293	**SDD 1**	**SDZ 2**
Explosion proof, E Exe II, 3 ph. / 50 Hz, temperature class T1-T3, protected to IP 54																	
VARD 400/6 Ex	6692	920	3465	0.25	400	0.97	—	470	40	—	21.0	not permitted		not permitted		**SDD 1**	**SDZ 1**
VARD 400/4 Ex	6693	1400	5360	0.55	400	1.51	—	470	40	—	25.0	not permitted		not permitted		**SDD 1**	**SDZ 1**
VARD 400/2 Ex[4]	6694	2895	10950	4.60	400	8.20	—	498	40	—	83.0	not permitted		not permitted		**SDD 2**	**SDZ 2**

* Ex models: For nominal value of motor see information on page 16 [1] includes full motor protection unit [2] includes operation and speed switch [3] see product page for flush mounted version
[4] Vibration monitoring is necessary (on site) pursuant to DIN EN 14986. [5] Frequency inverter with integrated Sine filter, Type FU-BS 2,5 , No. 5459, see product page FU.

400/2 — R.P.M. = 2800

Frequency		Hz	Total	125	250	500	1k	2k	4k	8k
L_{WA}	Air noise	dB(A)	98	69	80	91	94	94	90	81
$L_{PA,4m}$	Air noise	dB(A)	78	49	60	71	74	74	70	61

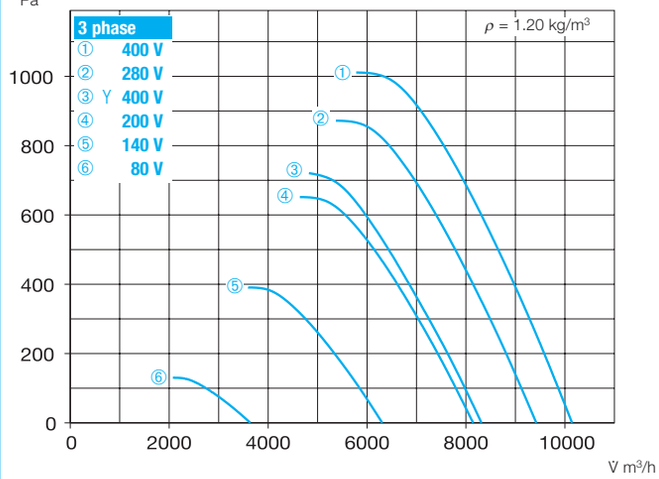

400/4 — R.P.M. = 1450

Frequency		Hz	Total	125	250	500	1k	2k	4k	8k
L_{WA}	Air noise	dB(A)	83	59	72	77	79	77	70	60
$L_{PA,4m}$	Air noise	dB(A)	63	39	52	57	59	57	50	40

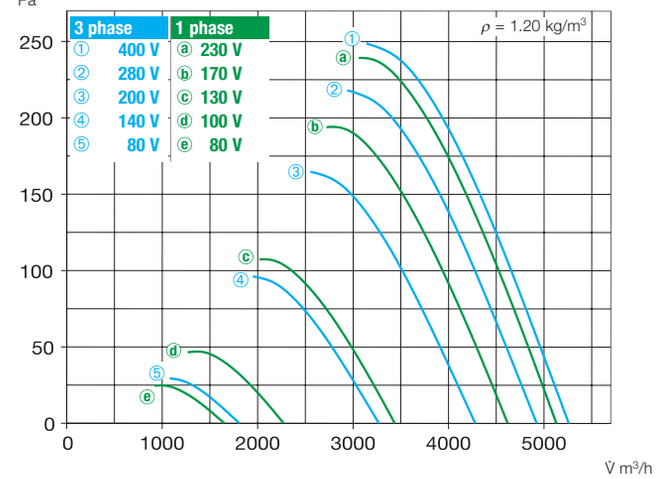

400/6 — R.P.M. = 930

Frequency		Hz	Total	125	250	500	1k	2k	4k	8k
L_{WA}	Air noise	dB(A)	72	56	62	68	68	64	56	47
$L_{PA,4m}$	Air noise	dB(A)	52	36	42	48	48	44	36	27

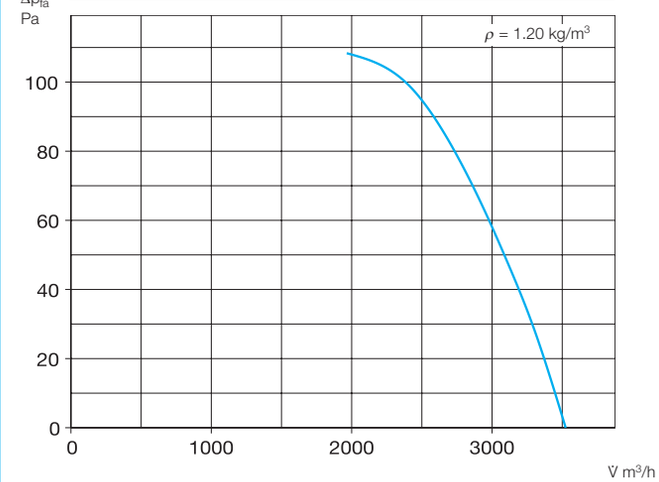

Other accessories Page

[b] **Accessories for ex-proof fans**

Flanged flexible connector
Type STS 400 Ex Ref. no. 2505
Flexible sleeve
Type FM 400 Ex Ref. no. 1692

Attenuators 421 on
Shutters and grilles 487 on
Speed controllers and switches 525 on

Accessories Specification see page 231 on

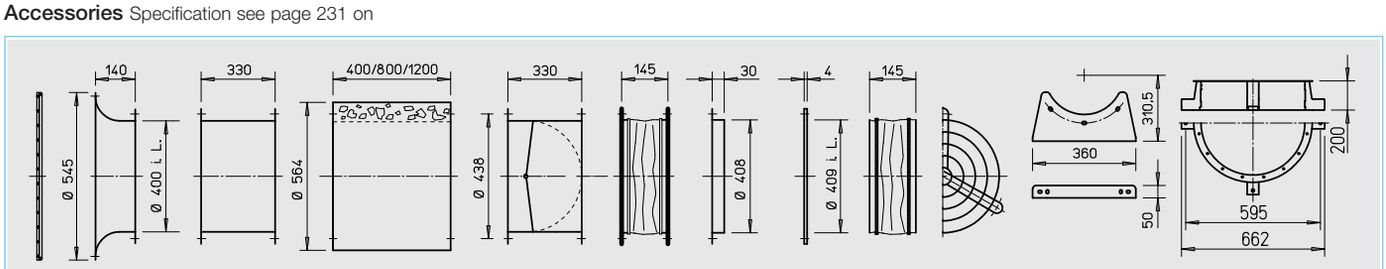

Bell mouth + guard **ASD-SGD 400** No. 1418

Extension duct **VR 400** No. 1406

Circular attenuators **RSD 400/..**

Automatic back-draught shutter **RVS 400** [a] No. 2596

Flanged flex. connector **STS 400** [b] No. 1223

Counter-flange **FR 400** No. 1206

Flat flange **FF 400** No. 4945

Flexible sleeve **FM 400** [b] No 1676

Guard **SG 400** No. 1239

Mounting feet **MK 400** (1 set = 2 pcs.) No. 1449

Mounting ring for vertical mounting **MRV 400** No. 1760

[a] For motorised shutters see accessory pages

[b] Types for explosion proof fans see left page

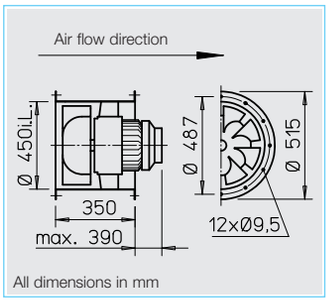

Specification

Casing
Manufactured in galvanised steel with flanges on both sides to DIN 24155, Pt. 3, vanes and fixed motor support. Models with R.P.M. = 2800 with welded casing made from hot dipped galvanised steel.

Impeller
Optimised for high pressure and performance.
Specially developed mixed-flow curved impeller manufactured from hot dipped galvanised steel.

Motor
Direct driven, maintenance free flange motor, totally enclosed with an aluminium casing and cooling fins, protected to IP 54. Sealed for life ball bearings with tropicalized protection of windings and interference-free. Optional drainage holes made to order (please state installation position).

Speed control
For all speed controllable models the current is given in the "speed controlled" column of the table below which must be used when selecting a controller (see controller column). The air flow volumes can be seen from the characteristic curves. If the fan is to be controlled by a frequency inverter without a sine filter, this must be stated when ordering. This requires a change of fan design and potential additional costs. Explosion proof fans are not controllable.

Electrical connection
Terminal box fitted externally on the casing as standard (IP 55).

Installation
Installation in any position. Ensure that motor drainage holes (where used) face downwards.

Motor protection
All models (excluding ex-proof models) have thermal contacts and PTC Thermistors as standard which must be connected to a full motor protection unit (see table below) for effective motor protection.
Models without thermal contacts must be protected by a conventional circuit breaker.

Sound levels
Data shown within the performance curves refer to sound power levels. For determination of the lower sound pressure levels refer to diagram on "Technical information" page.
Sound emission and acoustic information on page 10 on.

Information	Page
Technical description	208
Selection chart	209
Information for planning	10 on

Made to order designs
Alternative voltages, frequencies, protection classes, acid protection, high temperatures etc. are available on request.

For safety and correct use note the technical information on page 15 on.

Type	Ref. no.	R.P.M.	Air flow volume (FID)	Motor power*	Voltage	Current* standard supply	Current* speed controlled	Wiring diagram	Maximum air flow temp. standard supply	Maximum air flow temp. speed controlled	Nominal weight (net)	5 step transformer controller Pole switch Type	Ref. no.	Full motor protection starter using the motor thermal contacts Type	Ref. no.	Anti vibration mounts comp	Anti vibration mounts susp
		min^{-1}	V m³/h	kW	V	A	A	No.	+°C	+°C	kg	Type	Ref. no.	Type	Ref. no.	Type	Type
1 Phase motor, 1 ph. / 50 Hz, protection to IP 54																	
VARW 450/4	6736	1330	7180	1.47	230	6.50	7.00	968	60	40	45.0	**MWS 7,5**[1)]	1950	**MW**	1579	**SDD 1**	**SDZ 1**
3 Phase motor, 50 Hz, protection to IP 54																	
VARD 450/2	6698	2950	14210	8.03	400	13.8	—	776	60	—	95.0	**FU-CS18**[1)5)]	5469	**MSA**[3)]	1289	**SDD 2**	**SDZ 2**
Two-speed, 3 ph., 50 Hz, Y/△ switch, protection to IP 54																	
VARD 450/4/4	6697	1100/1370	5930/7390	0.74/1.00	400Y/Δ	1.2/2.3	2.3	520	60	40	45.0	**RDS 4**[1)]	1316	**M 4**[2)]	1571	**SDD 1**	**SDZ 1**
Explosion proof, E Exe II, 3 ph. / 50 Hz, temperature class T1-T3, protected to IP 54																	
VARD 450/6 Ex	6699	900	5020	0.25	400	0.99	—	470	40	—	48.0	not permitted		not permitted		**SDD 1**	**SDZ 1**
VARD 450/4 Ex	6700	1425	7640	1.10	400	2.55	—	470	40	—	51.0	not permitted		not permitted		**SDD 1**	**SDZ 1**
VARD 450/2 Ex[4)]	6701	2930	15810	7.50	400	14.10	—	498	40	—	155.0	not permitted		not permitted		**SDD 2**	**SDZ 2**

* Ex models: For nominal value of motor see information on page 16 [1)] includes full motor protection unit [2)] includes operation and speed switch [3)] for PTC Thermistor temp. sensor
[4)] Vibration monitoring is necessary (on site) pursuant to DIN EN 14986. [5)] with integrated Sine filter, see product page FU

450/2 — R.P.M. = 2800

Frequency		Hz	Total	125	250	500	1k	2k	4k	8k
L_{WA}	Air noise	dB(A)	103	73	84	95	98	98	94	85
$L_{PA,4m}$	Air noise	dB(A)	83	53	64	75	78	78	74	65

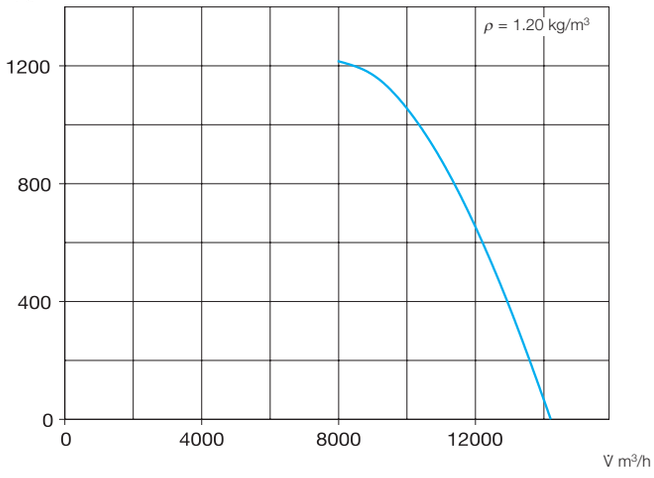

450/4 — R.P.M. = 1400

Frequency		Hz	Total	125	250	500	1k	2k	4k	8k
L_{WA}	Air noise	dB(A)	87	62	76	81	83	80	74	64
$L_{PA,4m}$	Air noise	dB(A)	67	42	56	61	63	60	54	44

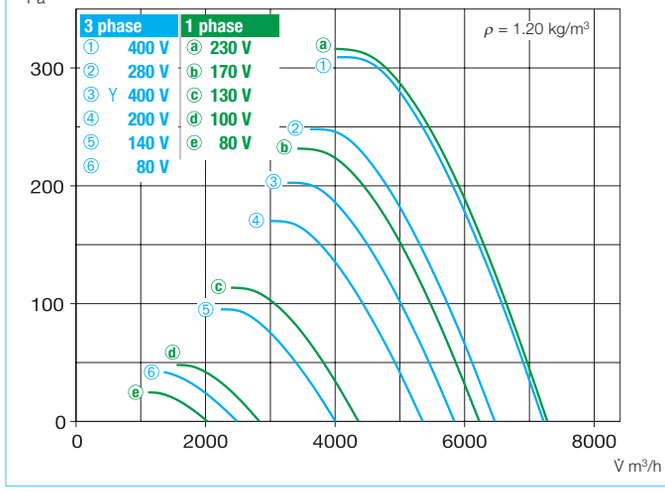

450/6 — R.P.M. = 930

Frequency		Hz	total	125	250	500	1k	2k	4k	8k
L_{WA}	Air noise	dB(A)	76	60	65	71	72	67	59	51
$L_{PA,4m}$	Air noise	dB(A)	56	40	45	51	52	47	39	31

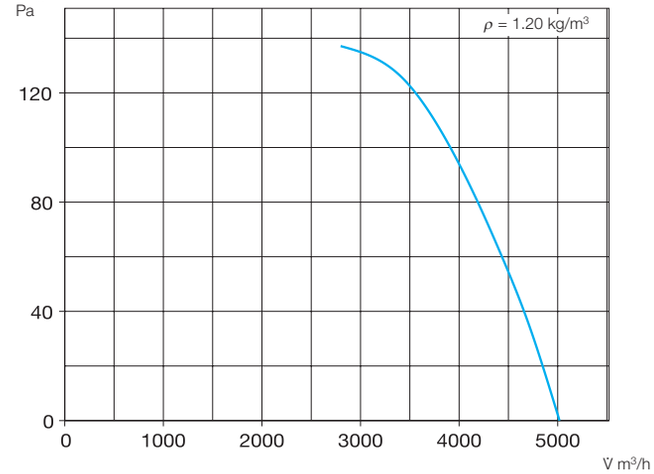

Other accessories	Page
[b] Accessories for ex-proof fans	
Flanged flexible connector Type STS 450 Ex Ref. no. 2506	
Flexible sleeve Type FM 450 Ex Ref. no. 1693	
Attenuators	421 on
Shutters and grilles	487 on
Speed controllers and switches	525 on

Accessories Specification see page 231 on

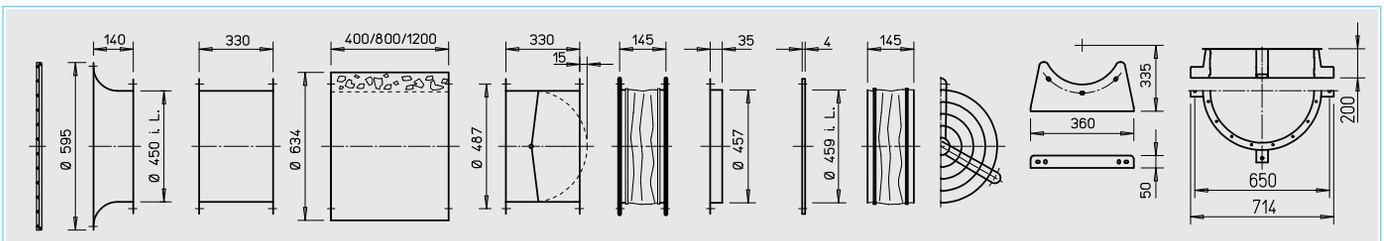

Bell mouth + guard **ASD-SGD 450** No. 1419

Extension duct **VR 450** No. 1407

Circular attenuators **RSD 450/..**

Automatic back-draught shutter **RVS 450** [a] No. 2597

Flanged flex. connector **STS 450** [b] No. 1224

Counter-flange **FR 450** No. 1207

Flat flange **FF 450** No. 4946

Flexible sleeve **FM 450** [b] No. 1677

Guard **SG 450** No. 1240

Mounting feet **MK 450** (1 set = 2 pcs.) No. 1449

Mounting ring for vertical mounting **MRV 450** No. 1761

[a] For motorised shutters see accessory pages

[b] Types for explosion proof fans see left page

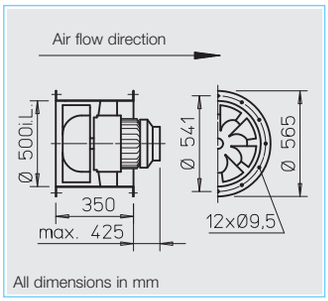

Specification

Casing
Manufactured in galvanised steel with flanges on both sides to DIN 24155, Pt. 3, vanes and fixed motor support. Models with R.P.M. = 2800 with welded casing made from hot dipped galvanised steel.

Impeller
Optimised for high pressure and performance.
Specially developed mixed-flow curved impeller manufactured from hot dipped galvanised steel.

Motor
Direct driven, maintenance free flange motor, totally enclosed with an aluminium casing and cooling fins, protected to IP 54. Sealed for life ball bearings with tropicalized protection of windings and interference-free. Optional drainage holes made to order (please state installation position).

Speed control
For all speed controllable models the current is given in the "speed controlled" column of the table below which must be used when selecting a controller (see controller column). The air flow volumes can be seen from the characteristic curves. If the fan is to be controlled by a frequency inverter without a sine filter, this must be stated when ordering. This requires a change of fan design and potential additional costs. Explosion proof fans are not controllable.

Electrical connection
Terminal box fitted externally on the casing as standard (IP 55).

Installation
Installation in any position. Ensure that motor drainage holes (where used) face downwards.

Motor protection
All models (excluding ex-proof models) have thermal contacts and PTC Thermistors as standard which must be connected to a full motor protection unit (see table below) for effective motor protection.
Models without thermal contacts must be protected by a conventional circuit breaker.

Sound levels
Data shown within the performance curves refer to sound power levels. For determination of the lower sound pressure levels refer to diagram on "Technical information" page.
Sound emission and acoustic information on page 10 on.

Information	Page
Technical description	208
Selection chart	209
Information for planning	10 on

Made to order designs
Alternative voltages, frequencies, protection classes, acid protection, high temperatures etc. are available on request.

For safety and correct use note the technical information on page 15 on.

Type	Ref. no.	R.P.M.	Air flow volume (FID)	Motor power*	Voltage	Current* standard supply	Current* speed controlled	Wiring diagram	Maximum air flow temp. standard supply	Maximum air flow temp. speed controlled	Nominal weight (net)	5 step transformer controller Pole switch Type	Ref. no.	Full motor protection starter using the motor thermal contacts Type	Ref. no.	Anti vibration mounts comp Type	Anti vibration mounts susp Type
		min^{-1}	V m^3/h	kW	V	A	A	No.	+°C	+°C	kg						
1 Phase motor, 1 ph. / 50 Hz, protection to IP 54																	
VARW 500/4	6739	1340	9920	2.02	230	9.10	9.10	968	60	40	70.0	**MWS 10**[1]	1946	**MW**	1579	**SDD 2**	**SDZ 2**
3 Phase motor, 50 Hz, protection to IP 54																	
VARD 500/2	6705	2935	21730	15.70	400	29/16.7	—	776	60	—	180.0	**FU-CS32**[1)5)]	5471	**MSA**[3]	1289	**SDD 2**	**SDZ 3**
Two-speed, 3 ph., 50 Hz, Y/△ switch, protection to IP 54																	
VARD 500/4/4	6704	1120/1370	8360/10070	1.2/1.8	400Y/Δ	2.1/3.9	3.9	520	60	40	70.0	**RDS 7**[1]	1578	**M 4**[2]	1571	**SDD 2**	**SDZ 2**
Explosion proof, E Exe II, 3 ph. / 50 Hz, temperature class T1-T3, protected to IP 54																	
VARD 500/6 Ex	6706	930	6810	0.55	400	1.83	—	470	40	—	70.0	not permitted		not permitted		**SDD 2**	**SDZ 2**
VARD 500/4 Ex	6707	1420	10470	2.00	400	4.65	—	470	40	—	75.0	not permitted		not permitted		**SDD 2**	**SDZ 2**
VARD 500/2 Ex[4]	6708	2930	21760	12.50	400	23.50	—	498	40	—	215.0	not permitted		not permitted		**SDD 3**	**SDZ 3**

* Ex models: For nominal value of motor see information on page 16 [1] includes full motor protection unit [2] includes operation and speed switch [3] for PTC Thermistor temp. sensor
[4] Vibration monitoring is necessary (on site) pursuant to DIN EN 14986. [5] with integrated Sine filter, see product page FU

500/2 — R.P.M. = 2900

Frequency		Hz	Total	125	250	500	1k	2k	4k	8k
L_{WA}	Air noise	dB(A)	106	76	87	99	101	101	97	89
$L_{PA,4m}$	Air noise	dB(A)	86	56	67	79	81	81	77	69

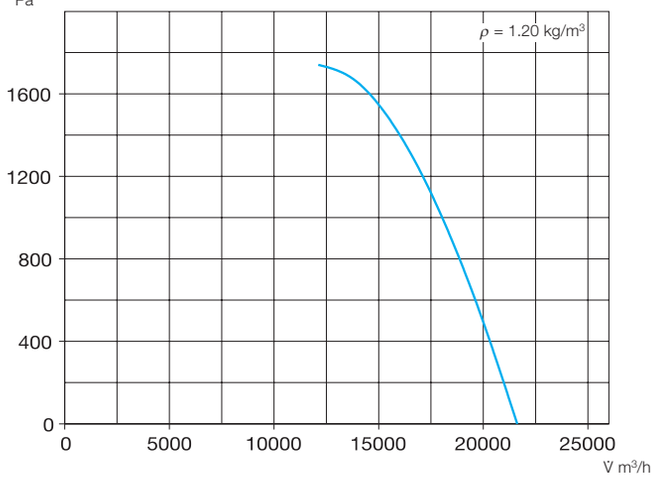

500/4 — R.P.M. = 1450

Frequency		Hz	Total	125	250	500	1k	2k	4k	8k
L_{WA}	Air noise	dB(A)	90	66	79	84	86	84	77	67
$L_{PA,4m}$	Air noise	dB(A)	70	46	59	64	66	64	57	47

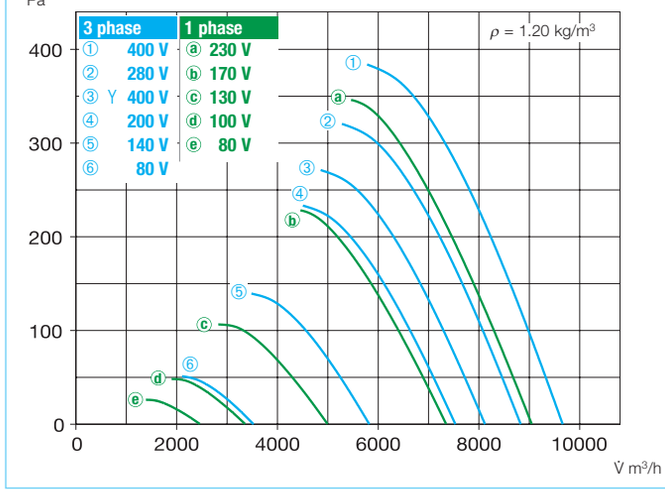

500/6 — R.P.M. = 930

Frequency		Hz	Total	125	250	500	1k	2k	4k	8k
L_{WA}	Air noise	dB(A)	79	63	69	74	75	71	63	54
$L_{PA,4m}$	Air noise	dB(A)	59	43	49	54	55	51	43	34

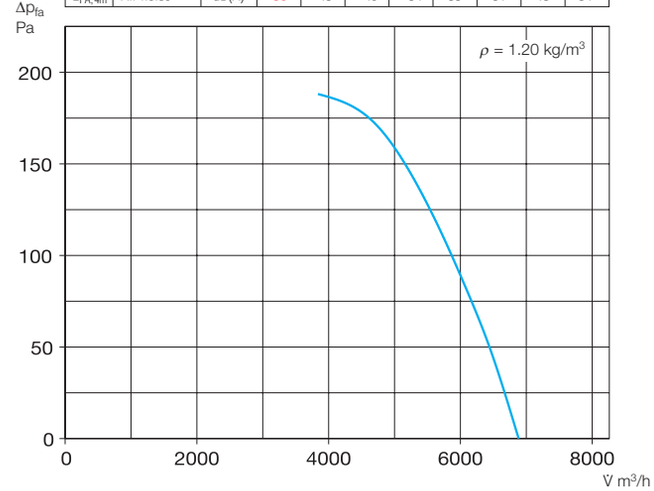

Other accessories	Page
[b] **Accessories for ex-proof fans**	
Flanged flexible connector	
Type STS 500 Ex Ref. no. 2507	
Flexible sleeve	
Type FM 500 Ex Ref. no. 1694	
Attenuators	421 on
Shutters and grilles	487 on
Speed controllers and switches	525 on

Accessories Specification see page 231 on

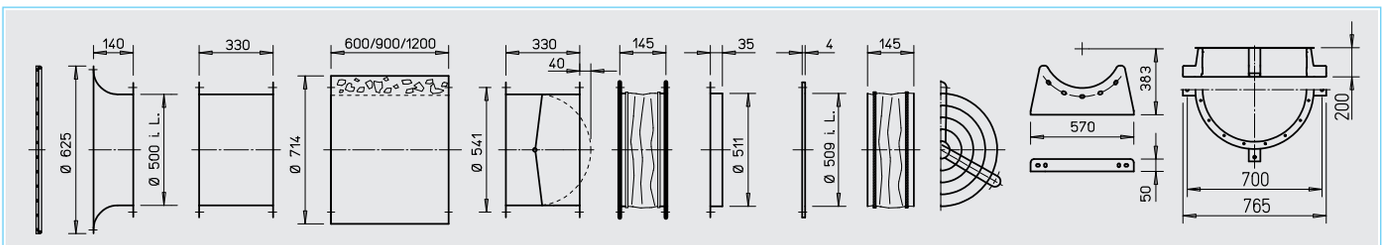

Bell mouth + guard **ASD-SGD 500** No. 1420

Extension duct **VR 500** No. 1408

Circular attenuators **RSD 500/..**

Automatic back-draught shutter **RVS 500** [a] No. 2598

Flanged flex. connector **STS 500** [b] No. 1225

Counter-flange **FR 500** No. 1208

Flat flange **FF 500** No. 4947

Flexible sleeve **FM 500** [b] No. 1678

Guard **SG 500** No. 1241

Mounting feet **MK 500** (1 set = 2 pcs.) No. 1450

Mounting ring for vertical mounting **MRV 500** No. 1740

[a] For motorised shutters see accessory pages

[b] Types for explosion proof fans see left page

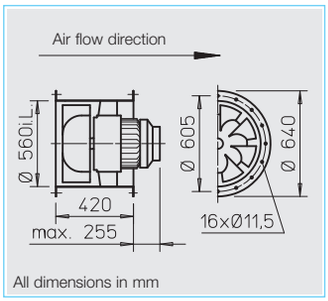

Specification

Casing
Manufactured in galvanised sheet steel with flanges on both sides to DIN 24155, Pt. 3, with fixed guide vanes and motor support.

Impeller
Optimised for high pressure and performance.
Specially developed mixed-flow curved impeller manufactured from hot dipped galvanised steel.

Motor
Direct driven, maintenance free flange motor, totally enclosed with an aluminium casing and cooling fins, protected to IP 54. Sealed for life ball bearings with tropicalized protection of windings and interference-free.
Optional drainage holes made to order (please state installation position).

Speed control
The voltage controllable models are identified by a value in the "speed controlled" column of the table below which must be used when selecting a controller (see controller column). The air flow volumes can be seen from the characteristic curves. Explosion proof fans are not controllable.

Electrical connection
Terminal box fitted externally on the casing as standard (IP 55).

Installation
Installation in any position. Ensure that motor drainage holes (where used) face downwards.

Motor protection
All models (excluding ex-proof models and pole switch models) have thermal contacts and PTC Thermistors as standard which must be connected to a full motor protection unit (see table below) for effective motor protection.
Models without thermal contacts must be protected by a conventional circuit breaker.

Sound levels
Data shown within the performance curves refer to sound power levels. For determination of the lower sound pressure levels refer to diagram on "Technical information" page.
Sound emission and acoustic information on page 10 on.

Information	Page
Technical description	208
Selection chart	209
Information for planning	10 on

Made to order designs
Alternative voltages, frequencies, protection classes, acid protection, high temperatures etc. are available on request.

For safety and correct use note the technical information on page 15 on.

Type	Ref. no.	R.P.M.	Air flow volume (FID)	Motor power*	Voltage	Current* standard supply	Current* speed controlled	Wiring diagram	Maximum air flow temp. standard supply	Maximum air flow temp. speed controlled	Nominal weight (net)	5 step transformer controller Pole switch Type	Ref. no.	Full motor protection starter using the motor thermal contacts Type	Ref. no.	Anti vibration mounts comp	Anti vibration mounts susp
		min⁻¹	V m³/h	kW	V	A	A	No.	+°C	+°C	kg	Type	Ref. no.	Type	Ref. no.	Type	Type
Two-speed, 3 ph., 50 Hz, Y/△ switch, protection to IP 54																	
VARD 560/4/4	6711	1130/1380	10780/12810	2.20/3.00	400Y/Δ	3.5/5.9	6.5	520	60	40	95.0	**RDS 7**[1]	1578	**M 4**[2]	1571	**SDD 2**	**SDZ 2**
Pole-switching, 2 speed motor (Dahlander windings Y/YY), 3 ph. / 50 Hz, protection to IP 54												Pole switch					
VARD 560/8/4	6790	705/1440	6590/13570	0.90/3.60	400	2.9/8.3	—	471	60	—	100.0	**PDA 12**[3]	5081	—	—	**SDD 2**	**SDZ 2**
Explosion proof, E Exe II, 3 ph. / 50 Hz, temperature class T1-T3, protected to IP 54																	
VARD 560/8 Ex	6712	700	7120	0.37	400	1.61	—	470	40	—	85.0	not permitted		not permitted		**SDD 2**	**SDZ 2**
VARD 560/6 Ex	6713	900	9360	1.10	400	3.10	—	470	40	—	90.0	not permitted		not permitted		**SDD 2**	**SDZ 2**
VARD 560/4 Ex[4]	6714	1440	14980	3.60	400	7.70	—	498	40	—	105.0	not permitted		not permitted		**SDD 2**	**SDZ 2**

* Ex models: For nominal value of motor see information on page 16 [1] includes full motor protection unit [2] includes operation and speed switch [3] see product page for flush mounted version
[4] Vibration monitoring is necessary (on site) pursuant to DIN EN 14986.

560/4

R.P.M. = 1450

Frequency		Hz	Total	125	250	500	1k	2k	4k	8k
L_{WA}	Air noise	dB(A)	93	69	83	87	90	87	80	70
$L_{PA,4m}$	Air noise	dB(A)	73	49	63	67	70	67	60	50

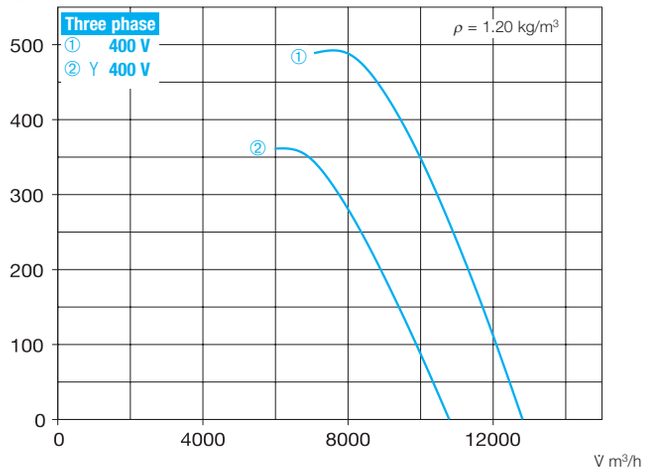

560/6

R.P.M. = 950

Frequency		Hz	Total	125	250	500	1k	2k	4k	8k
L_{WA}	Air noise	dB(A)	83	67	72	78	79	75	67	58
$L_{PA,4m}$	Air noise	dB(A)	63	47	52	58	59	55	47	38

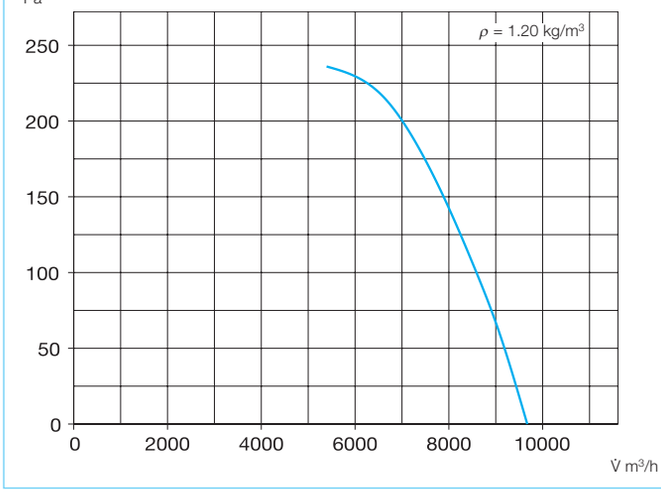

560/8

R.P.M. = 725

Frequency		Hz	Total	125	250	500	1k	2k	4k	8k
L_{WA}	Air noise	dB(A)	76	61	68	72	72	66	58	51
$L_{PA,4m}$	Air noise	dB(A)	56	41	48	52	52	46	38	31

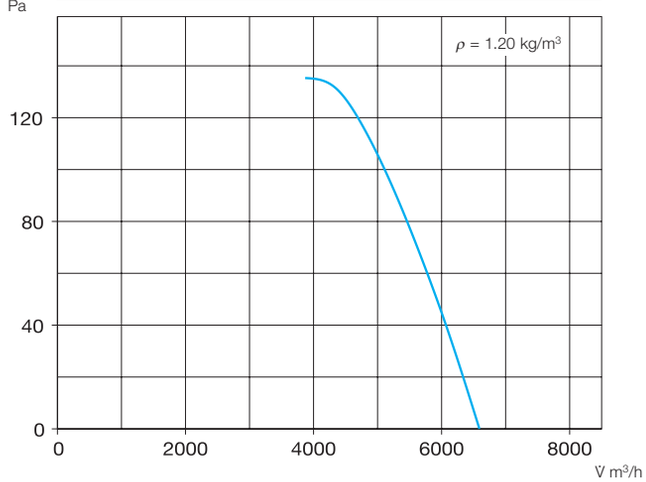

Other accessories	Page
[b] Accessories for ex-proof fans	
Flanged flexible connector Type STS 560 Ex Ref. no. 2508	
Flexible sleeve Type FM 560 Ex Ref. no. 1695	
Attenuators	421 on
Shutters and grilles	487 on
Speed controllers and switches	525 on

Accessories Specification see page 231 on

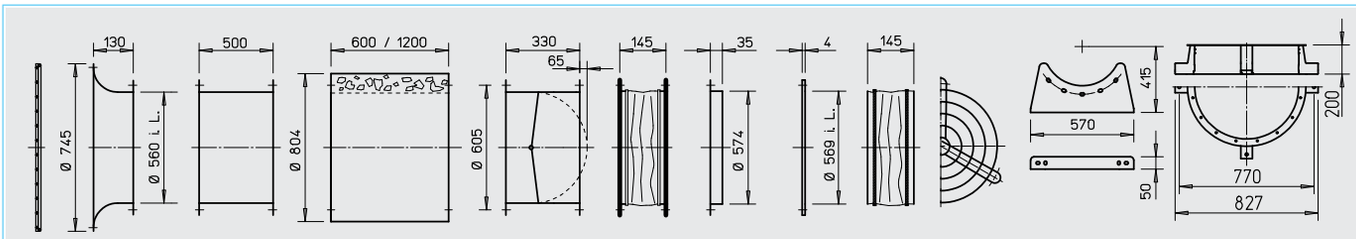

Bell mouth + guard **ASD-SGD 560** No. 1421

Extension duct **VR 560** No. 1409

Circular attenuators **RSD 560/..**

Automatic back-draught shutter **RVS 560** [a] No. 2599

Flanged flex. connector **STS 560** [b] No. 1226

Counter-flange **FR 560** No. 1209

Flat flange **FF 560** No. 4948

Flexible sleeve **FM 560** [b] No. 1679

Guard **SG 560** No. 1242

Mounting feet **MK 560** (1 set = 2 pcs.) No. 1450

Mounting ring for vertical mounting **MRV 560** No. 1741

[a] For motorised shutters see accessory pages

[b] Types for explosion proof fans see left page

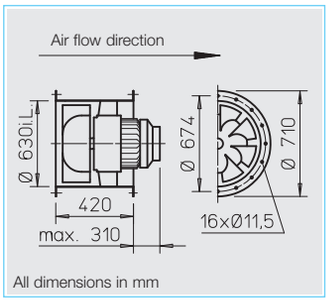

Specification

Casing
Manufactured in galvanised sheet steel with flanges on both sides to DIN 24155, Pt. 3, with fixed guide vanes and motor support, hot dipped galvanised.

Impeller
Optimised for high pressure and performance.
Specially developed mixed-flow curved impeller manufactured from hot dipped galvanised steel.

Motor
Direct driven, maintenance free flange motor, totally enclosed with an aluminium casing and cooling fins, protected to IP 54. Sealed for life ball bearings with tropicalized protection of windings and interference-free.
Optional drainage holes made to order (please state installation position).

Speed control
Stepless (0-100%) by using a frequency inverter (excluding pole switch models). If the fan is to be controlled by a frequency inverter without a sine filter, this must be stated when ordering. This requires a change of fan design and potential additional costs. Explosion proof fans are not controllable.

Electrical connection
Terminal box fitted externally on the casing as standard (IP 55).

Installation
Installation in any position. Ensure that motor drainage holes (where used) face downwards.

Motor protection
Model VARD 630/4 has PTC thermistors which must be connected to a full motor protection unit (see table below) for effective motor protection.
Models without thermal contacts must be protected by a conventional circuit breaker.

Sound levels
Data shown within the performance curves refer to sound power levels. For determination of the lower sound pressure levels refer to diagram on "Technical information" page.
Sound emission and acoustic information on page 10 on.

Information	Page
Technical description	208
Selection chart	209
Information for planning	10 on

Made to order designs
Alternative voltages, frequencies, protection classes, acid protection, high temperatures etc. are available on request.

For safety and correct use note the technical information on page 15 on.

Type	Ref. no.	R.P.M.	Air flow volume (FID)	Motor power*	Voltage	Current* standard supply	Current* speed controlled	Wiring diagram	Maximum air flow temp. standard supply	Maximum air flow temp. speed controlled	Nominal weight (net)	5 step transformer controller Pole switch		Full motor protection starter using the motor thermal contacts		Anti vibration mounts comp	Anti vibration mounts susp
		min⁻¹	V m³/h	kW	V	A	A	No.	+°C	+°C	kg	Type	Ref. no.	Type	Ref. no.	Type	Type
3 Phase motor, 50 Hz, protection to IP 54																	
VARD 630/4	6717	1440	21320	6,20	400	12.0/6.9	—	776	60	—	145.0	**FU-BS 14**[1]	5463	**MSA**[4]	1289	**SDD 2**	**SDZ 2**
Pole-switching, 2 speed motor (Dahlander windings Y/YY), 3 ph. / 50 Hz, protection to IP 54												Pole switch					
VARD 630/8/4	6792	715/1430	10590/21170	1,40/5,50	400	5.0/12.0	—	471	60	—	145.0	**PDA 12**[3]	5081	—	—	**SDD 2**	**SDZ 2**
Explosion proof, E Exe II, 3 ph. / 50 Hz, temperature class T1-T3, protection to IP 54																	
VARD 630/8 Ex	6718	700	10220	0,95	400	2.75	—	470	40	—	110.0	not permitted		not permitted		**SDD 2**	**SDZ 2**
VARD 630/6 Ex	6719	950	13990	1,90	400	4.70	—	470	40	—	130.0	not permitted		not permitted		**SDD 2**	**SDZ 2**
VARD 630/4 Ex[5]	6720	1435	21400	6,80	400	13.1	—	498	40	—	165.0	not permitted		not permitted		**SDD 2**	**SDZ 3**

* Ex models: For nominal value of motor see information on page 16
[1] includes full motor protection unit and Sine filter
[2] includes operation and speed switch
[3] see product page for flush mounted version
[4] for PTC Thermistor temp. sensor
[5] Vibration monitoring is necessary (on site) pursuant to DIN EN 14986.

630/4 — R.P.M. = 1450

Frequency		Hz	Total	125	250	500	1k	2k	4k	8k
L_{WA}	Air noise	dB(A)	97	73	89	91	93	91	84	74
$L_{PA,4m}$	Air noise	dB(A)	77	53	69	71	73	71	64	54

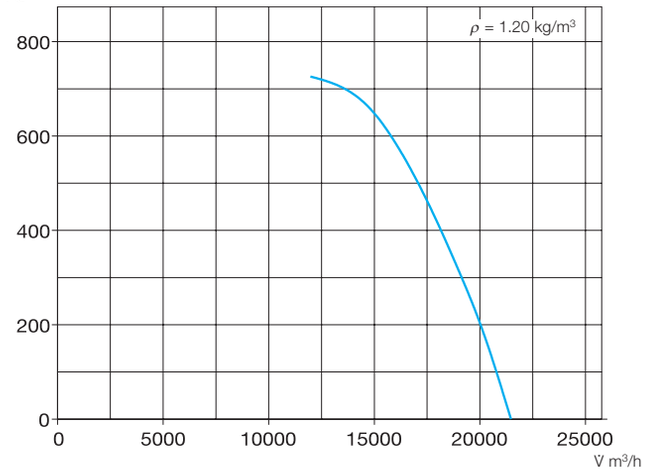

630/6 — R.P.M. = 950

Frequency		Hz	Total	125	250	500	1k	2k	4k	8k
L_{WA}	Air noise	dB(A)	87	70	76	82	83	78	70	62
$L_{PA,4m}$	Air noise	dB(A)	67	50	56	62	63	58	50	42

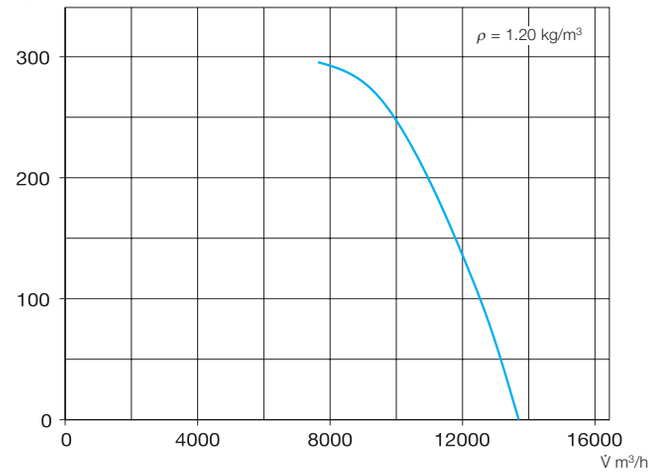

630/8 — R.P.M. = 725

Frequency		Hz	Total	125	250	500	1k	2k	4k	8k
L_{WA}	Air noise	dB(A)	80	65	71	76	75	70	62	55
$L_{PA,4m}$	Air noise	dB(A)	60	45	51	56	55	50	42	35

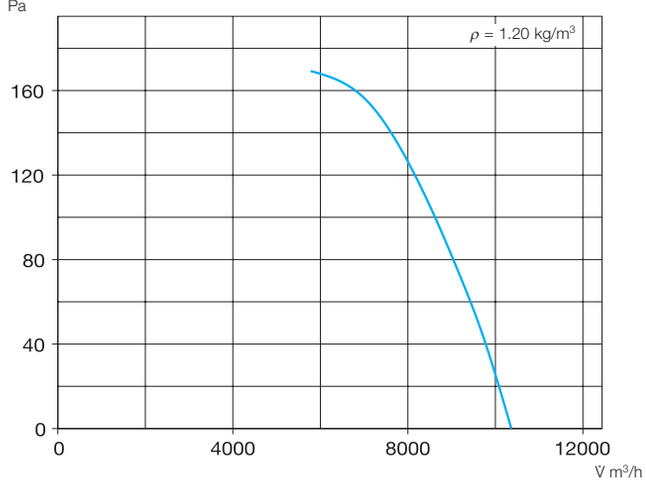

Other accessories	Page
[b] **Accessories for ex-proof fans**	
Flanged flexible connector Type STS 630 Ex Ref. no. 2509	
Flexible sleeve Type FM 630 Ex Ref. no. 1696	
Attenuators	421 on
Shutters and grilles	487 on
Speed controllers and switches	525 on

Accessories Specification see page 231 on

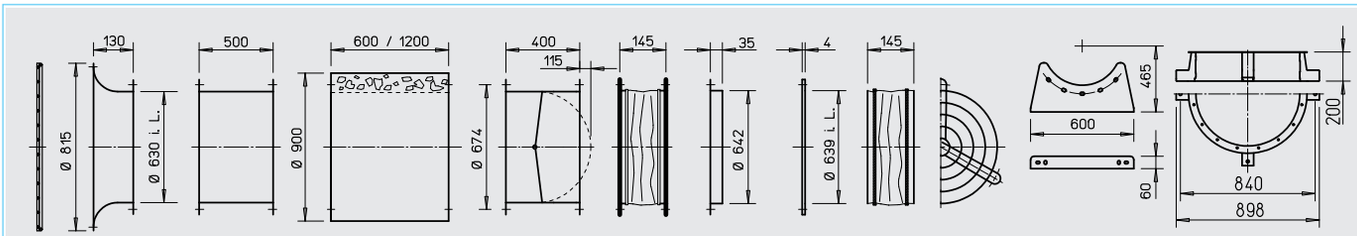

Bell mouth + guard **ASD-SGD 630** No. 1422

Extension duct **VR 630** No. 1410

Circular attenuators **RSD 630/..**

Automatic back-draught shutter **RVS 630** [a] No. 2600

Flanged flex. connector **STS 630** [b] No. 1228

Counter-flange **FR 630** No. 1211

Flat flange **FF 630** No. 4949

Flexible sleeve **FM 630** [b] No. 1680

Guard **SG 630** No. 1243

Mounting feet **MK 630** (1 set = 2 pcs.) No. 1333

Mounting ring for vertical mounting **MRV 630** No. 1742

[a] For motorised shutters see accessory pages

[b] Types for explosion proof fans see left page

For everything to run like clockwork during installation.

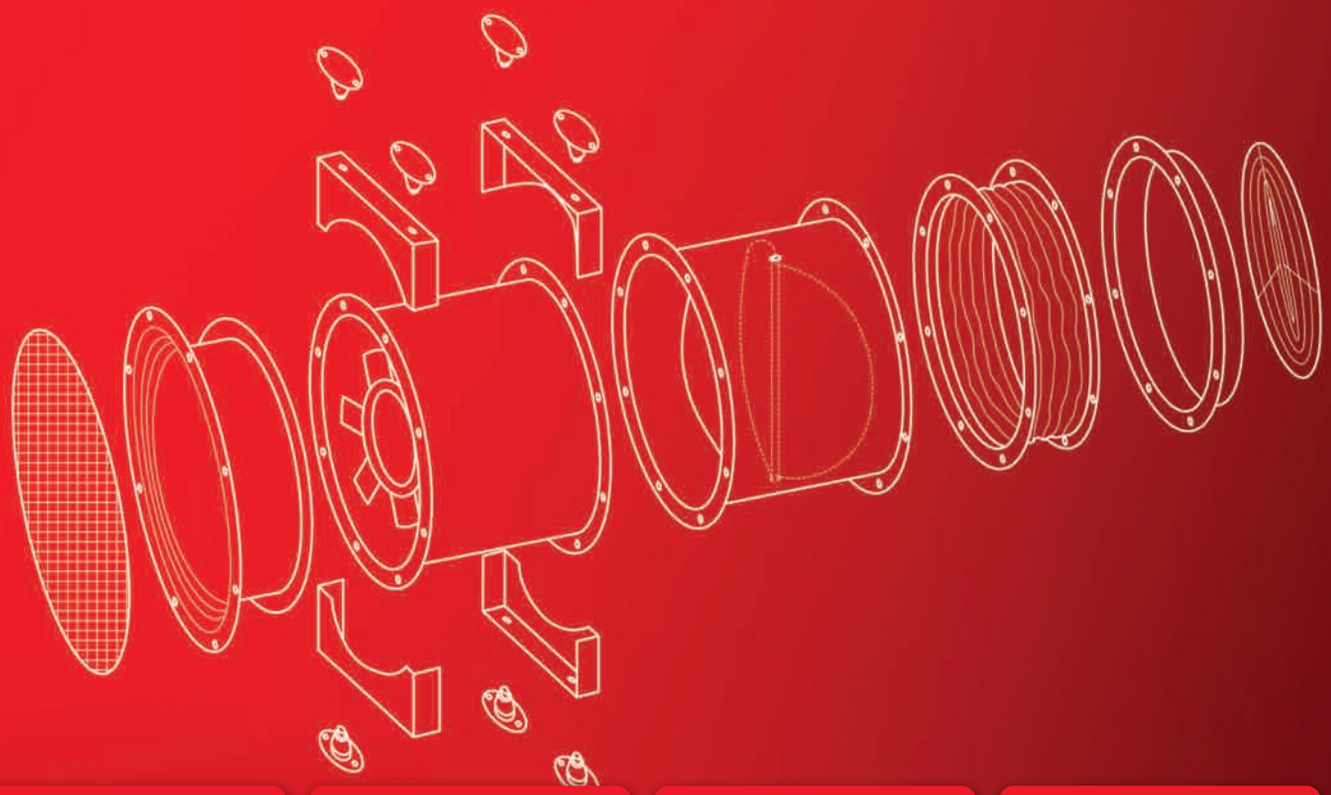

INSTALLATION ACCESSORIES IN-LINE FANS

Whatever is needed for installation and line connection: The wide range available from Helios includes the matching system components. From the suction nozzle to the electrical backdraught shutters and the vibration dampers.

231 on

ATTENUATORS AIR FILTERS HEATER BATTERIES

Helios air treatment components ensure clean, warm and smooth air. The extensive range includes all sizes and powers, perfectly coordinated to Helios fans. This allows the necessary flexibility in terms of planning and installation.

421 on

BACKDRAUGHT SHUTTERS VENTILATION GRILLES

Weather-proof and anti-corrosive. Long service life, made from unbreakable UV-resistant polymer. Helios backdraught shutters and weather protection grilles have pleasant shapes, impressive robustness and are easy to install.

487 on

CONTROLLERS INVERTERS SWITCHES

In addition to the special installation accessories for in-line fans, Helios offers a variety of regulation, control and switching devices, which are perfectly tailored to the in-line fans.

525 on

ASD-SGD

Dim. in mm

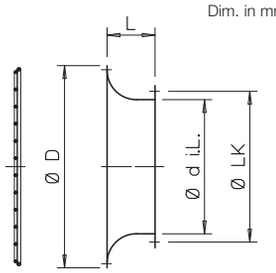

Bell mouth + guard
and large inlet radius. Made from hot dipped galvanised sheet steel. Connection side with flange to DIN 24155, Pt. 2. Powder-coated guard for intake-side cover (from Ø 800 galvanised), protection to DIN EN ISO 13857.

Type	Ref. no.	Ø D	L	Ø d i.L.	Ø LK	Weight in kg
ASD 200*	1388	310	140	203	235	0.9
ASD-SGD 225	1413	345	140	225	259	2.5
ASD-SGD 250	1414	370	140	250	286	2.8
ASD-SGD 280	1415	400	140	280	322	3.2
ASD-SGD 315	1416	435	140	315	356	3.5
ASD-SGD 355	1417	475	140	355	395	4.0
ASD-SGD 400	1418	545	140	400	438	4.5
ASD-SGD 450	1419	595	140	450	487	5.7
ASD-SGD 500	1420	625	140	500	541	6.3
ASD-SGD 560	1421	745	130	560	605	7.0
ASD-SGD 630	1422	815	130	630	674	7.6
ASD-SGD 710	1423	955	200	710	751	19.5
ASD-SGD 800	1424	1060	200	800	837	22.3
ASD-SGD 900	1309	1140	200	900	934	25.0
ASD-SGD 1000	1310	1240	200	1000	1043	28.5

* without guard

SG

Dim. in mm

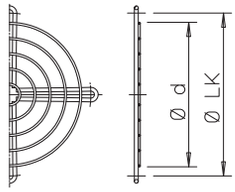

Guard
to cover impeller opening. Powder-coated, colour: silver-metallic (from Ø 800 galvanised).

Dimensions and holes to match fan-flange tube nom. size DIN 24155, Pt. 2. Protection to DIN EN ISO 13857.

Type	Ref. no.	Ø d	Ø LK	Weight in kg	Number of fixing points
SG 200	1216	190	235	0.1	3
SG 225	1215	224	259	0.2	3
SG 250	1236	241	286	0.2	3
SG 280	1428	270	322	0.3	4
SG 315	1237	310	356	0.4	4
SG 355	1238	350	395	0.4	4
SG 400	1239	390	438	0.5	3
SG 450	1240	450	487	0.6	3
SG 500	1241	490	541	0.7	3
SG 560	1242	550	605	0.9	4
SG 630	1243	630	674	1.5	4
SG 710	1244	710	751	1.8	4
SG 800	1245	790	837	2.2	4
SG 900	1246	890	934	2.7	4
SG 1000	1290	990	1043	3.5	4

RVS

Dim. in mm

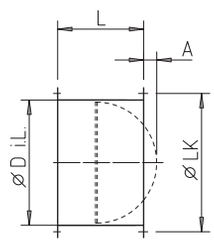

Automatic backdraught shutter with spring closing[1]
Horizontal installation for air flow in any direction. Vertical for with air flow direction going upwards. Automatic opening on fan operation. Spring mechanism for closing. Closing force adjustable to suit fan power and installation position. Spring mechanism outside the air flow. Shutters and casing manufactured from galvanised steel, ND 225-560 shutters made from aluminium. Flanges on both sides, drillings to DIN 24155, Pt. 2.

Type[2]	Ref. no.	Ø D i.L.	L	A	Ø LK	Weight in kg
RVS 225	2591	225	300	—	259	3.0
RVS 250	2592	250	300	—	286	3.4
RVS 280	2593	280	300	—	322	3.9
RVS 315	2594	315	300	—	356	4.3
RVS 355	2595	355	300	—	395	5.0
RVS 400	2596	400	330	—	438	7.2
RVS 450	2597	454	330	15	487	10.4
RVS 500	2598	504	330	40	541	11.7
RVS 560	2599	560	330	65	605	16.1
RVS 630	2600	630	400	115	674	19.5
RVS 710	2601	710	400	155	751	26.5
RVS 800	2602	800	420	200	837	37.3
RVS 900	2603	900	420	250	934	41.8
RVS 1000	2604	1000	420	300	1043	47.3

[1] Pressure loss diagram see page 490 [2] Ambient temperature –30 to +100 °C

RVM

Dim. in mm

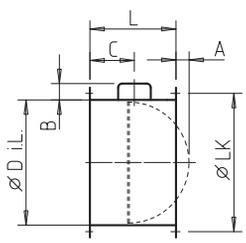

Motorised backdraught shutter[1]
as RVS, but with spring reversing motor (outside the air flow). Installation in any position vertically and horizontally. Recommended electrical connection in parallel to fan. Connection with 0.9 m long lead.

Ambient temperature	–30 to +60 °C
Protection class	IP 54
Voltage/Frequency	230 V AC, 50/60 Hz
Power	
– to Ø 560/from Ø 630	14 W/6.5 W
Opening time approx.	75 sec.
Wiring diagram no.	380.1

Type[3]	Ref. no.	Ø D i.L.	B	C	L	A	Ø LK	Weight in kg
RVM 225	2575	225	95	130	300	—	259	3.3
RVM 250	2576	250	95	130	300	—	286	3.7
RVM 280	2577	280	95	130	300	—	322	4.2
RVM 315	2578	315	95	130	300	—	356	4.6
RVM 355	2579	355	95	130	300	—	395	5.3
RVM 400	2580	400	95	130	330	—	438	7.5
RVM 450	2581	454	95	130	330	15	487	10.7
RVM 500	2582	504	95	130	330	40	541	12.0
RVM 560	2583	560	95	130	330	65	605	16.4
RVM 630	2609	630	150	225	400	115	674	21.0
RVM 710	2610	710	150	225	400	155	751	28.0
RVM 800	2614	800	150	225	420	200	837	37.8
RVM 900	2615	900	150	225	420	250	934	42.3
RVM 1000*	2616	1000	150	225	420	300	1043	47.8

[3] Type RVM not for use in Ex-areas. * RVM 1000 only for horizontal flow.

VR

Dim. in mm

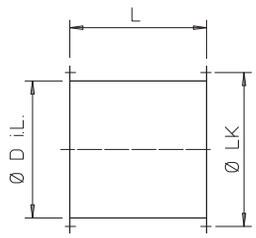

Extension duct

Ducting with flanges on both sides and holes to DIN 24155, Pt. 2. Manufactured from galvanised steel, to elongate the fan casing.

For models where the motor protrudes from the casing when installed into ducting. Avoids drops in performance at free extract.

Type	Ref. no.	Ø D i.L.	L	Ø LK	Weight in kg
VR 225	1401	225	300	259	2.5
VR 250	1402	250	300	286	2.8
VR 280	1403	280	300	322	3.2
VR 315	1404	315	300	356	3.5
VR 355	1405	355	300	395	4.0
VR 400	1406	400	330	438	6.0
VR 450	1407	454	330	487	9.0
VR 500	1408	504	330	541	10.0
VR 560	1409	560	500	605	14.0
VR 630	1410	630	500	674	15.5
VR 710	1411	710	500	751	21.5
VR 800	1412	800	420	837	31.0
VR 900	1311	900	420	934	34.0
VR 1000	1312	1000	420	1043	37.6

STS

Dim. in mm

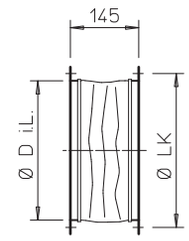

Flanged flexible connector

Flexible connector to be fitted between fan and ducting to reduce vibration transmission and to correct small site misalignments.

Flexible sleeve consists of a silicon free polymer fabric cloth and has zinc plated metal flanges fitted at both ends (max. + 80 °C). Dimensions to DIN 24155, Pt. 2.

Type	Ref. no.	Type *	Bestell-Nr.	Ø D i.L.	Ø LK	Weight in kg
STS 200	1219	—	—	205	235	1.3
STS 225	1218	**STS 225 Ex**	2500	229	259	1.1
STS 250	1220	**STS 250 Ex**	2501	252	286	1.3
STS 280	1231	**STS 280 Ex**	2502	288	322	1.5
STS 315	1221	**STS 315 Ex**	2503	322	356	1.8
STS 355	1222	**STS 355 Ex**	2504	361	395	2.3
STS 400	1223	**STS 400 Ex**	2505	404	438	2.5
STS 450	1224	**STS 450 Ex**	2506	453	487	3.8
STS 500	1225	**STS 500 Ex**	2507	507	541	3.4
STS 560	1226	**STS 560 Ex**	2508	570	605	4.5
STS 630	1228	**STS 630 Ex**	2509	638	674	4.6
STS 710	1229	**STS 710 Ex**	2510	711	751	7.0
STS 800	1233	**STS 800 Ex**	2511	801	837	7.5
STS 900	1234	**STS 900 Ex**	2512	898	934	7.5
STS 1000	1235	**STS 1000 Ex**	2513	1004	1043	15.0

* for explosion-proof fans

FR / FF

Dim. in mm

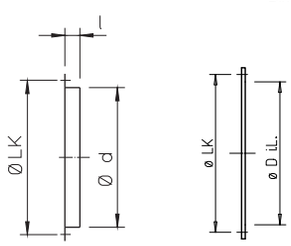

Counterflange FR / flat flange FF

Angled flange ring / flat flange ring made from galvanised sheet steel. Dimensions / holes according to DIN 24155 Pt. 2.

Type	Ref. no.	Type	Ref. no.	Ø LK	l	Ø d	Ø d i.L.	Weight in kg
FR 200	1202	—	—	235	25	209	—	0.5
FR 225	1201	—	—	259	30	233	—	0.5
FR 250	1203	**FF 250**	4941	286	25	256	256	0.7
FR 280	1214	**FF 280**	4942	322	30	292	286	0.9
FR 315	1204	**FF 315**	4943	356	30	326	321	1.0
FR 355	1205	**FF 355**	4944	395	30	365	361	1.1
FR 400	1206	**FF 400**	4945	438	30	408	409	1.2
FR 450	1207	**FF 450**	4946	487	35	457	459	1.3
FR 500	1208	**FF 500**	4947	541	35	511	509	1.5
FR 560	1209	**FF 560**	4948	605	35	574	569	2.1
FR 630	1211	**FF 630**	4949	674	35	642	639	2.3
FR 710	1212	**FF 710**	4950	751	35	715	719	3.1
FR 800	1198	**FF 800**	4951	837	35	806	809	3.9
FR 900	1199	**FF 900**	4952	934	35	903	909	4.4
FR 1000	1210	**FF 1000**	4953	1043	35	1012	1009	9.5

FM

Dim. in mm

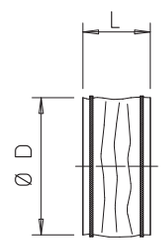

Flexible sleeve

Flexible connector incl. 2 worm drive clips to be fitted between fan and ducting to reduce vibration transmission and to correct small misalignments. Flexible sleeve made from silicon-free PVC fabric (max. temp. + 80 °C). Dimensions to DIN 24155, Pt. 2.

Type	Ref. no.	Type *	Ref. no.	Ø D	L	Weight in kg
FM 200	1670	**FM 200 Ex**	1686	213	145	0.2
FM 225	1671	**FM 225 Ex**	1687	235	145	0.2
FM 250	1672	**FM 250 Ex**	1688	260	145	0.2
FM 280	1673	**FM 280 Ex**	1689	296	145	0.2
FM 315	1674	**FM 315 Ex**	1690	330	145	0.2
FM 355	1675	**FM 355 Ex**	1691	369	145	0.3
FM 400	1676	**FM 400 Ex**	1692	412	145	0.3
FM 450	1677	**FM 450 Ex**	1693	461	145	0.3
FM 500	1678	**FM 500 Ex**	1694	515	145	0.4
FM 560	1679	**FM 560 Ex**	1695	577	145	0.4
FM 630	1680	**FM 630 Ex**	1696	646	145	0.4
FM 710	1666	—	—	720	145	0.5

* for explosion-proof fans

MK

Dim. in mm

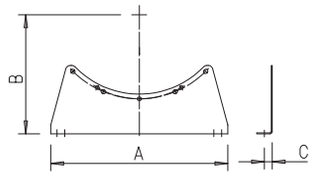

Mounting feet
To fix fan flange casing to ceilings, walls or floors. Made from hot-dipped galvanised steel.
Fixing holes fit casing flanges.
Set includes a pair of feet, nuts and bolts.

Note:
If motors of high weight are installed, an extension duct (VR) is recommended to move the centre of gravity within the mounting feet. Mount feet on the outer flange.

Type	Ref. no.	A	B	C	Weight in kg
MK 200-225	1446	310	208/220	20	1.5
MK 250-280	1447	340	227/245	20	1.7
MK 315-355	1448	380	281/300	25	2.2
MK 400-450	1449	360	311/335	25	2.6
MK 500-560	1450	570	383/415	25	5.3
MK 630	1333	600	465	30	8.5
MK 710	1372	670	515	35	10.5
MK 800	1373	680	565	35	15.5
MK 900	1374	760	625	35	18.0
MK 1000	1375	840	690	35	19.5

MRV

Dim. in mm

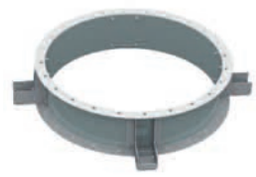

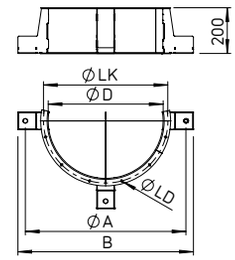

Mounting ring MRV
The mounting ring MRV is provided for the vertical mounting of fans (e.g. Helios types AVD, AMD, VAR etc.). Four mounting brackets for direct mounting or anti-vibration dampers (SDZ or SDD) ensure the secure vertical mounting of fans. Made from galvanised sheet steel.

Type	Ref. no.	Ø A	B	Ø D	Ø LK	Ø LD	Weight	Max. load capacity
MRV 315	1755	510	576	315	356	9,5 (8x)	6.5 kg	280 kg
MRV 355	1759	550	618	355	395	9,5 (8x)	6.9 kg	280 kg
MRV 400	1760	595	662	400	438	9,5 (12x)	7.4 kg	280 kg
MRV 450	1761	650	714	450	487	9,5 (12x)	7.9 kg	280 kg
MRV 500	1740	700	765	500	541	9,5 (12x)	8.3 kg	280 kg
MRV 560	1741	770	827	560	605	11,5 (16x)	12.9 kg	390 kg
MRV 630	1742	840	898	630	674	11,5 (16x)	13.9 kg	390 kg
MRV 710	1743	920	980	710	751	11,5 (16x)	15.7 kg	390 kg
MRV 800	1744	1030	1101	800	837	11,5 (24x)	24.8 kg	1050 kg
MRV 900	1745	1130	1201	900	934	11,5 (24x)	27.0 kg	1050 kg
MRV 1000	1749	1230	1301	1000	1043	11,5 (24x)	29.1 kg	1050 kg

SDD

Dim. in mm

SDD 1 – 3

SDD 1F, 4 – 10

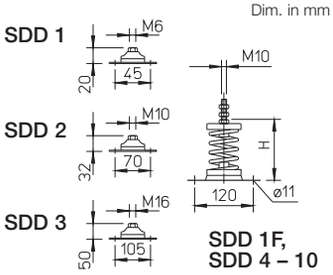

Anti vibration mounts for compression
To reduce noise and vibration transmission of fans installed on horizontal surfaces.
Simple installation in combination with feet MK (accessory). Select size according to fan weight see table).

Rubber elements are suitable for small to middle weights and ambient temperatures up to + 60 °C. Spring elements are suitable for higher temperatures above + 60 °C (e.g. smoke extraction).

Type	Ref. no.	max. fan weight kg	H Height in mm	Spring element	Contents 1 set = 4 pieces
SDD 1	1452	80	*		
SDD 1F	1942	70	112 – 82	●	
SDD 2	1453	180	*		
SDD 3	1367	750	*		
SDD 4	1944	130	112 – 86	●	
SDD 5	1924	210	112 – 86	●	
SDD 6	1926	400	112 – 80	●	
SDD 7	1928	580	112 – 82	●	
SDD 8	1930	900	112 – 82	●	
SDD 9	1934	1300	112 – 85	●	
SDD 10	1951	1800	112 – 88	●	

* specified in dimensional drawing

SDZ

Dim. in mm

SDZ 1 – 2

SDZ 3
(no Fig.,
with square four-point fastening)

SDZ 1F, 4 – 9

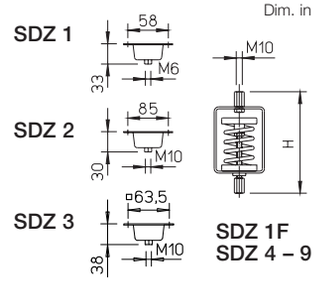

Anti vibration mounts for suspension
To reduce noise and vibration transmission of fans installed hanging from ceilings.
Specification as model SDD.

Important note for installation of anti vibration mounts!
Make sure that fan system is well balanced (centre of gravity of heavy motor may cause uneven loading of mounts).

Type	Ref. no.	max. fan weight kg	H Height in mm	Spring element	Contents 1 set = 4 pieces
SDZ 1	1454	60	*		
SDZ 1F	1943	70	190 – 220	●	
SDZ 2	1455	160	*		
SDZ 3	1366	300	*		
SDZ 4	1945	130	190 – 216	●	
SDZ 5	1925	210	190 – 216	●	
SDZ 6	1927	400	190 – 221	●	
SDZ 7	1929	580	190 – 220	●	
SDZ 8	1931	900	190 – 220	●	
SDZ 9	1935	1300	190 – 217	●	

* specified in dimensional drawing